23 Dec R4 Dec./2022-23/L3/0000 VC : 700277 SAP No. : 2000018008

India : Toll Free No. 1800 103 5555 Other Countries : +91-7292 410500

SHAKTI PUMPS (INDIA) LIMITED

Plot No. 401, 402, & 413, Industrial Area, Sector - 3, Pithampur - 454774,
Dist. - Dhar, (M.P.) - INDIA, E-mail: info@shaktipumps.com
Visit us at : www.shaktipumps.com

SHAKTI®

PUMPING LIFE

INSTALLATION & OPERATING INSTRUCTIONS

NANDI UNIVERSAL DRIVE

SHAKTI
PUMPING LIFE

CONTENT PAGE NO.

* Only applicable if dongle is available.

Preface

Thank you for choosing Shakti's Nandi Universal Drive. We are pleased to provide you a product that incorporates the latest technology and exceptional services to the customers.

This manual includes information for installation, maintenance, and safety of the drive. Please read the instructions of this manual carefully to ensure equipment's proper functioning and personal safety.

The images of the product shown are only for illustration the original product may vary.

In this manual company refers to Shakti Pumps India Ltd. Our contact details are given on the last page.

Please check the latest version at www.shaktipumps.com

Fig.1 Nandi Universal Drive

CHAPTER 1 : SAFETY INSTRUCTIONS

⚠ WARNING! Ignoring the following instructions can cause damage to the equipment or physical injury or in some cases death.

1.1 Pre-Installation Safety Measures

1. Before using the unit, read all the instructions and cautionary markings, on the unit and all its appropriate sections.
2. The gross weight of the equipment is close to 6 Kg. Kindly lift the drive carefully.
3. Please check the condition of the package and look for any sign of damage. Don't use the damaged or incomplete drive.
4. Customers are NOT authorized to open the drive or to do any kind of modification, or repair, otherwise, there is a danger of shock and loss of warranty.
5. To store the drive, kindly follow instructions given in chapter 2.

1.2 Installation Safety Measures

1. Installation should be done in the presence of a professional technician. Safety equipments such as shoes, helmets, and gloves should be used by the technician.
2. Installation of the drive should be carried out on a solar structure with proper ground clearance and specified nuts and bolts.
3. Install the drive on metal or other non-flammable material, and keep it away from any combustible material.
4. The drive should not be installed inside a closed chamber, to ensure proper heat dissipation. Ignoring this will result in malfunctioning of drive and loss of warranty.
5. Before starting wiring and connections make sure that PV panels, drive, motor, and all other accessories are properly fitted on their designated place.
6. Ensure that the drive, motor, and adjoining equipment are properly earthed to reduce electromagnetic emission and interference.
7. Make sure that earth conductors are adequately sized as required by safety regulations.
8. Make sure that the voltage grade of the power supply is consistent with the drive's voltage. Also, note that all PV panels are connected in series or parallel as per system's requirement in order to have required voltage fed to the drive.
9. There must not be any loose connection. Make sure that all insulations are proper in order to prevent any damage/injury. Also periodically inspect insulation in case of a bad weather.
10. Make sure that earthing wire is connected with drive. The wire diameter should be 6sq. mm and color coded is yellow-green or green.

11. Check whether the wiring is correct and firm, there should not be any short circuit in the peripheral equipment's circuit.
12. Ensure that the output of the drive is turned off while setting all the required parameters.
13. For the drives whose storage time is over 1 year, when electrification, the voltage should be raised by booster from low to high. Otherwise it may damage the drive.
14. Ensure that no unauthorised filter is connected to the output of the drive. It may cause loss of warranty.
15. No magnetic switch or magnetic contactor should be connected to the output circuit of the drive, when drive is in the operation with load, magnetic switch or magnetic contactor can falsely trigger the over-current protection function leading to mal-operation of the system.

1.3 Safety during Operation

1. Make sure that the ratings of the load (pump etc.) motor, and drive comply with each other.
2. The cooling fan or the heatsink should not be touched otherwise there is a danger of getting burnt.
3. Do not operate or touch the drive with the wet hand.
4. Do not put any of your belongings like mobile etc. on the drive.
5. Disconnect PV power from the drive under the supervision or presence of a trained electrician.
6. It is mandatory to disconnect input power before starting any maintenance work.
7. After the input is disconnected from the drive, wait for at least five minutes so as to allow the internal capacitors to get discharged for the safety of operation.
8. Do not conduct any insulation or voltage withstands tests on the drive.
9. At over 1,000 metres altitude, the drive's heat dissipation function deteriorates, therefore, use proper derating.
10. Untrained workers are banned to check the signals in the running stage.
11. Remove the PV power supply only after the electric machine stops running.
12. The load should be motor or pump. Any other load may cause heating or burn the device
13. The solar panel and drive should be clean once in a three months for proper operation of the drive.

Attention

1. The DC connection terminals PV+ and PV- carry a dangerous DC voltage of up to 800V.
2. At the drive input, the photovoltaic cells generate DC voltage even at low intensity of sunlight.
3. While cabling, make sure that it does not come in the path of any other work e.g. harvesting or digging.
4. If there is any abnormality kindly contact our customer care.
5. The drive and its heat sink may be at a relatively higher temperature than the ambient.
6. The drive output is pulse wave type. If a digital multimeter is used for measurement then there could be a large deviation in the measurement, and these deviations would be different for different kinds of digital multimeters.
7. Improper wiring and utilization or unauthorized alteration may result in damage to drive or other equipment, users will be responsible for the cause and there will be a loss of warranty.

CHAPTER 2 : INTRODUCTION

2.1 Product Overview

Shakti's Nandi Universal Drive is a unique product designed, developed and manufactured in India. Nandi Universal Drive is three phase variable frequency drive compatible with solar power system.
Nandi Universal Drive can convert the DC generated by solar panels into AC, which is in accordance with current required to drive motor.

Note : No internal or external isolation transformer is required.

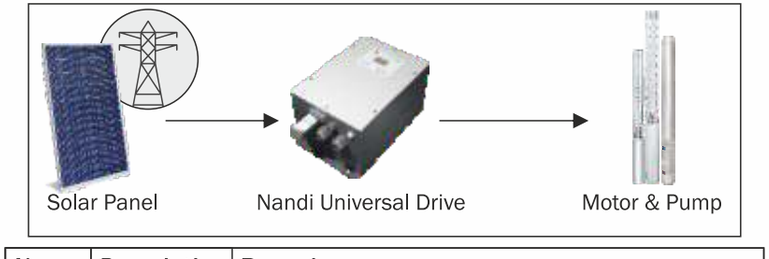

Name	Description	Remarks
A	Solar panels	Monocrystalline or polycrystalline silicon, and thin-film PV modules
B	VFD	10 HP - 35 HP
C	Motor	AC-IM, PMSM, IPMSM & S4RM

2.2 Caution

Measures to be taken for drive storage

- ✔ The variable frequency drive should be kept in the shipping carton or crate before installation.
- ✔ Storage area should be clean, dry, and free from direct sunlight or corrosive fumes.
- ✔ Storage area has an ambient temperature range of -20 °C to 60 °C.
- ✔ Storage area has a relative humidity range of 0% to 90% and non-condensing environment.
- ✔ Storage area has an air pressure range of 85kPA to 107kPA.

DO NOT store

- ✖ In an area with the rapid change in temperature (condensation and frost may be caused).
- ✖ In a place with lots of water leakage.
- ✖ In a place which has a high risk of fire ignition.
- ✖ Do not dispose of batteries in a fire. The batteries may explode.
- ✖ Do not open or damage batteries. Released electrolyte is harmful to the skin and eyes. It may be toxic.

NOTE: If storage of drive is for more than 3 months then ensure that temperature should not be more than 30° C. Storage more than a year may reduce the lifespan of drive.

2.3 Receiving and Inspection

2.3.1 Model Explanation

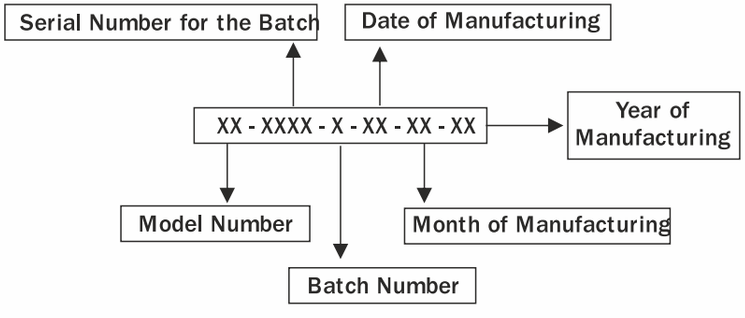

2.3.2 Terminal Connection

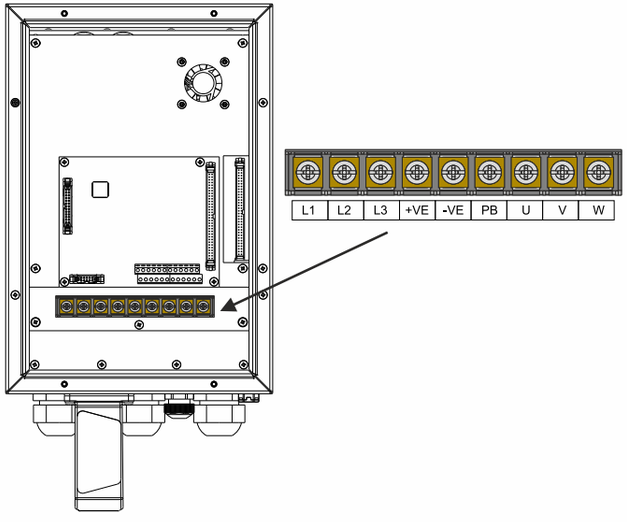

NANDI UNIVERSAL DRIVE

L1	R-Phase Grid/PV Positive
L2	Y-Phase Grid/PV Negative
L3	B-Phase Grid/PV Negative
+VE	DC bus +VE (use for power brake only)
-VE	DC bus -VE (use for power brake only)
PB	Power brake (use for power brake only)
U	R-Phase motor
V	Y-Phase motor
W	B-Phase motor

NANDI VH DRIVE

L1/R	R-Phase Grid
L2/Y	Y-Phase Grid
L3/B	B-Phase Grid
+VE/PV+	PV Positive
-VE/PV-	PV Negative
PB	Power Brake (use for power brake only)
U	R-phase motor
V	Y- Phase Motor
W	B-Phase Motor

WIRE COLOR CODING FOR INPUT CONNECTION			
INPUT TERMINAL	INDIA	EUROPE	USA
R	RED	GREY	RED
Y	YELLOW	BROWN	YELLOW
B	BLUE/BLACK	BLACK	BLACK

WIRE COLOR CODING FOR OUTPUT CONNECTION			
OUTPUT TERMINAL	INDIA	EUROPE	USA
R	RED	GREY	RED
Y	YELLOW	BROWN	YELLOW
B	BLUE/BLACK	BLACK	BLACK

1. Cable Selection as per SHAKTI portal guidelines. shaktipumps.com> Intra services>Cable Selection
2. Suitable Size of lug to be used at inut and output terminal connection.

2.3.3 Items Inside the Drive Box

S. No.	Item Name	Qty.	Manufacturer Part Number	Manufacturer Name
1	Nandi Universal Drive	1		
2	Shakti RMS Dongle	1		
3	Copper Lugs	2/9		
*4	User Manual	1		

*Nandi /Nandi VH

Note : The internal battery is Coin cell, 20.0mm Lithium 3V Non-Rechargeable (Primary). The battery can not be replaced & the battery life is 5 years .

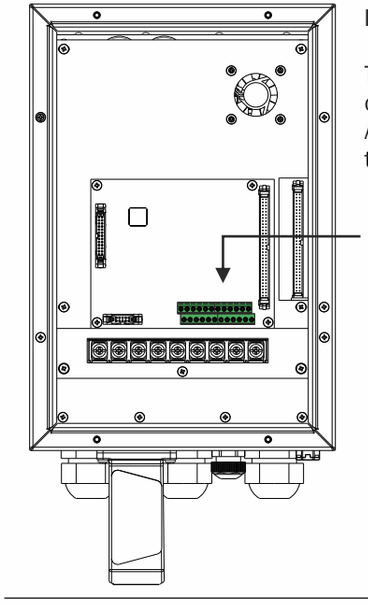

External Communication

The external communication to drive is controlled via the connector shown below.
All connections designations are mentioned in the image

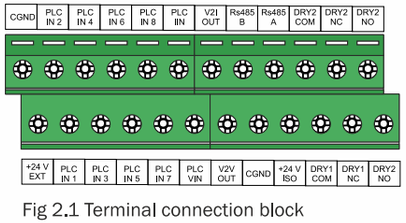

Fig 2.1 Terminal connection block

2.3.4 WIFI/GPRS DB9 Connector

Connect IoT dongle or RS 232 to USB Nandi Universal Drive to this port for recording and observing data from the Nandi Universal Drive on online portal. When the dongle is connected it sends recorded data of all the parameters used in operation of the unit. But if some specific parameter is required to be observed RS 232 to USB converter cable can be connected and data corresponding to a particular address according to the table 6.2 can be accessed.
NOTE: The Pins 1 & 5 of the DB9 Connector are the source pins of 5 V at few milliamperes current. These pins cannot be used as sink even for a single milliampere current.

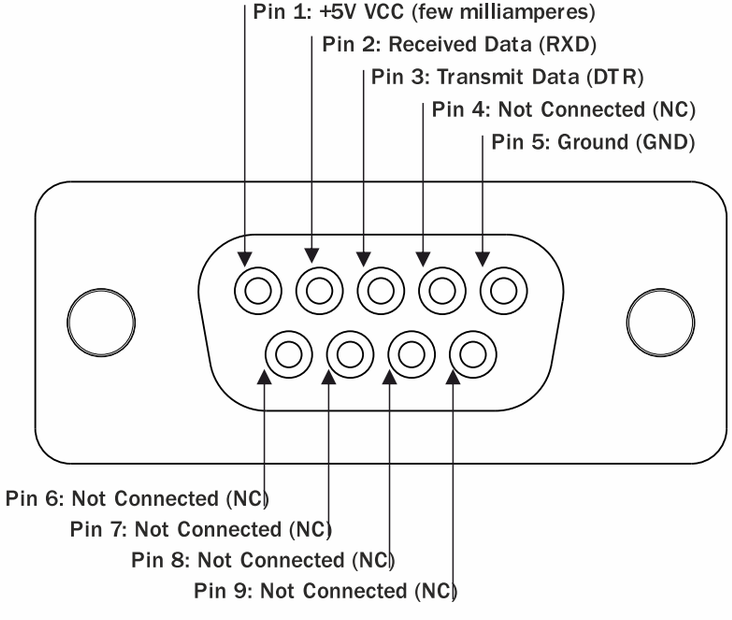

Fig. 2.2 RS232 Connector

2.3.5 SHAKTI RMS/IoT DONGLE

Remote Monitoring and Control
In-built Data Logger & RTC
Compatible with GSM, WiFi & Bluetooth

1. Product Appearance

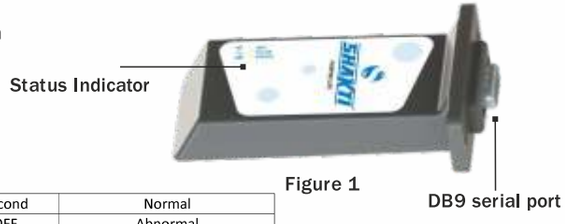

Figure 1

Status Indicator:

Pulse LED (GREEN)	Blink In every second	Normal
	Constant ON/OFF	Abnormal
Signal LED (RED)[1] GPS/Signal (RED)[2]	ON	Normal[1]/ GPS location fixed[2]
	Blink In every second	Getting GPS location[2]
	OFF	Abnormal(Signal low/zero)
NETWORK LED (GREEN)[2]	Constant ON	4G Connectivity
	Constant OFF	2G Connectivity
Wi-Fi LED (YELLOW)[1]	ON/Blink	Normal
	OFF	No WiFi Network

here 1 and 2 indicates 2G and 4G dongle respectively.

2. Installation and Connection:

For installing the SHAKTI IoT dongle.
Follow these steps :

Step1: Remove the cover and take out the motherboard.

Figure 2

Step2:
Insert SIM card as per the correct direction marked.

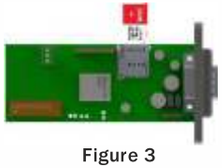

Figure 3

Step3:
Put the motherboard back into the enclosure.

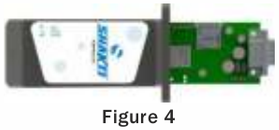

Figure 4

Step 4:
Insert the dongle into DB9 port and use two M3x10 screws to fix the dongle along with gasket.

3. Configuration

Step1: Connect the "Shakti IoT dongle" to the main device and check the "pulse LED" (green) blinking in every second.

Step2:
If the SIM card is present in the "Shakti IoT dongle" and network is available in that area the Signal LED (RED) will be ON as per the status indicator table.

Step3:
To configure the Wi-Fi in 2G dongle follow these steps:3.1)

Turn ON Wi-Fi on your Mobile and select "SHAKTI_DONGLE and connect it with the password "shakti123".

An HTML page will open in your browser otherwise browse http://192.168.4.1. You will get the HTML page like this:

Figure 6

3.2) Now "Configure Wi-Fi" now new page will open like this:

Figure 7

3.3) Select your preferred WiFi with proper password and then save. In case your WiFi network is not visible in the list scan again.

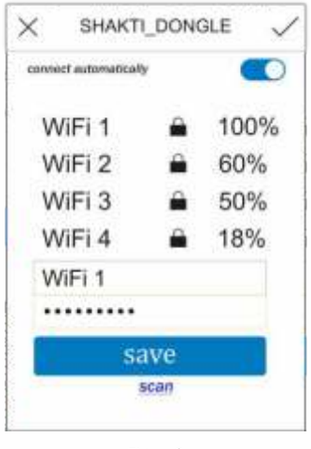

Figure 8

On successful configuration, WiFi LED (yellow) will be ON.

NOTE
a) Shakti IoT Dongle is designed to work with GSM on priority, WiFi is always secondary.
b) For using Wi-Fi remove SIM card then connect shakti dongle.
c) On successful TCP connection WI-FI yellow LED will blink in every second.

4. Troubleshooting
1) If Pulse LED is constantly ON/OFF, check main device power supply or restart the device.
2) If signal LED not glowing, check sim card / signal strength.
3) If Wi-Fi LED not glowing, check Wi-Fi network / reconfigure Wi-Fi settings.

5. Contact Shakti to integrate IoT Dongle to other products & solutions.

2 3 6 Specification

Product	Nandi Universal Drive				Nandi VH Drive
Model No.	**960000073**	**960000066**	**960000067**	**960000068**	**9600000106**
Power	20 HP	25 HP	30 HP	40 HP	Upto 75 HP
Input(DC)					
Min. DC Voltage	200 V				
Max. DC Voltage	850			720	850
Nominal DC Voltage	600V				
Start Voltage	200 V				
MPPT Voltage Range	300-720 V				
Max. DC Input Current	30 A	40 A	55 A	70 A	120 A
Max. Power at DC Side	18000 W	23000 W	30000 W	36000 W	75000 W
No. of MPPT	1				
Input(AC)					
AC Voltage Range	300-460VAC				
Frequency Range	45-65 Hz				
Output(AC)					
Nominal AC Voltage range	0-560 VAC				
Frequency	0-200 Hz				
Rated AC Current	25 A	38 A	50 A	65 A	120 A
Max AC Current	30 A	38 A	50 A	70 A	125 A
Max Power at AC side	18000 W	23000 W	30000 W	36000 W	75000 W
Power Factor Range	0.75 – 1				
Connection Phases	3 Phase only				
Efficiency					
Max Efficiency	> 96%				
MPPT Efficiency	>99%				
Protection					
Short Circuit Protection	YES				
Surge Protection	YES				
Over Temperature	YES				
Over Current	YES				
Over Voltage	YES				
Under Voltage	YES				
Dry Run	YES				
Ingress Protection	IP65				IP20
Interface					
Input Connection (DC)	Panel feed through terminal block				
Input Connection (AC)	Panel feed through terminal block				
Output Connection (AC)	Panel feed through terminal block				
Brake resistor Output	Panel feed through terminal block				
LCD Display	Graphical LCD (128x64 pixels)				
Communication					
Communication Protocols	RS485/Modbus/USB/RS232/PLC				
Features with Dongle	GSM/GPRS/Wi-Fi/Bluetooth				
Display Language	English				
General Data					
Topology	Two level VSI				
Cooling Method	Forced Air Cooling				
Ambient Humidity	0-90%				
Altitude	< 1000 m				
Mounting	Vertical				
Tightening Torque	3 Nm				4 Nm
Noise (dbA)	< 20 dBA				
Operating Temperatue Range	.-20C to 70C (45 to 70 with derating)				
Dimensions (L*W*H)	425 mm x 255 mm x 220 mm (30 Amp)		475 mm x 295 mm x 240 mm (40 – 70 Amp)		530 mm x 340 mm x 250 mm (120 Amp)
Standard Warranty	1 year				

2.3.7 Drive Frames and Appearances

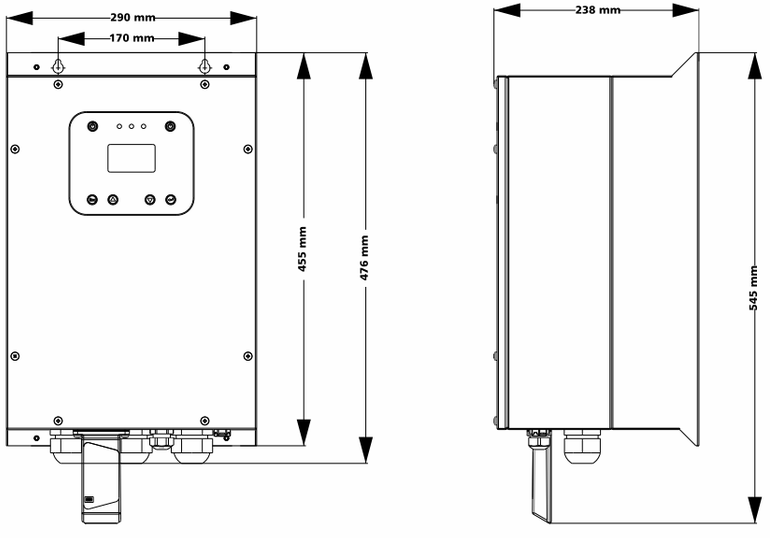

Figure 2.4 Drive top and side view

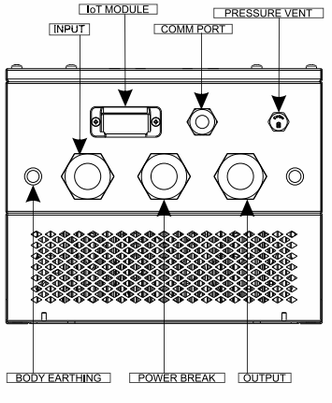

Figure 2.5 Drive Front view

Nandi 20 HP - 40 HP

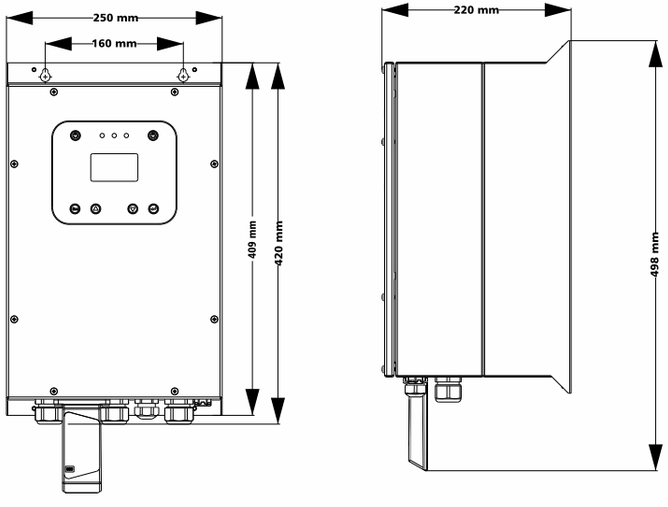

Figure 2.6 Drive top and side view

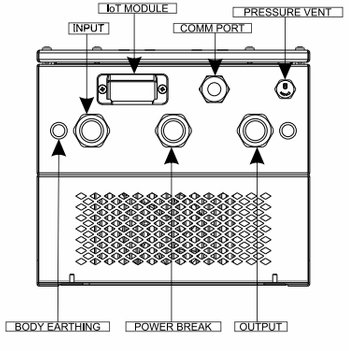

Figure 2.7 Drive Front view

Nandi 10 HP - 20 HP

* Product Image shown for reference only.

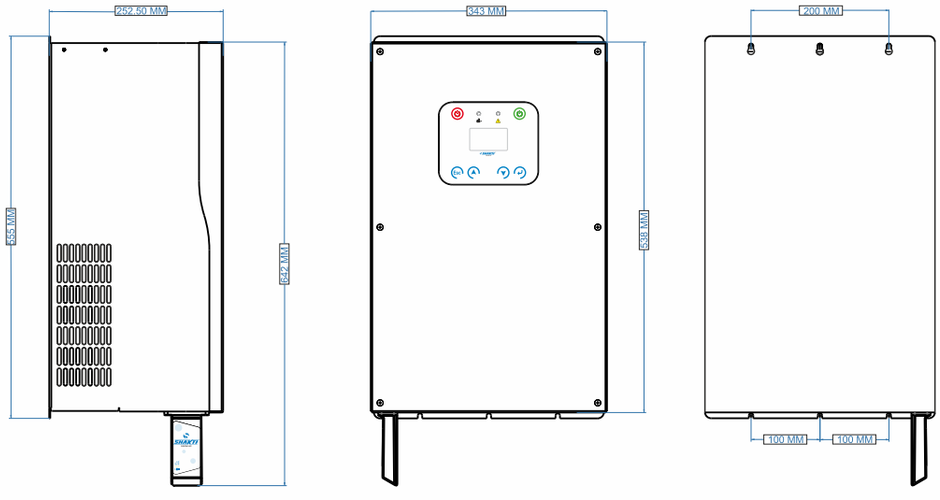

Figure 2.8 Drive Side, Top & Bottom View

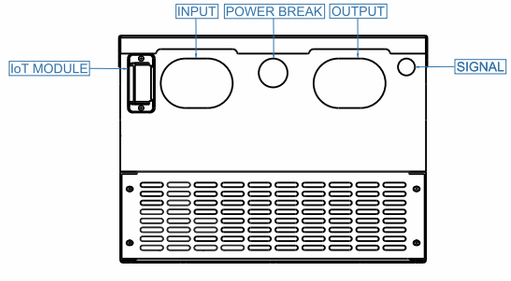

Figure 2.9 Drive Front View

Nandi VH upto 75 HP

CHAPTER 3: INSTALLATION AND WIRING

Installation of the drive is simple with effortless wiring connections for Nandi Universal Drive. Its DC input has poka-yoke connectors i.e. wrong connection is not possible by virtue of its construction. The drive works properly even in case of reverse polarity connection.

3.1 Guidelines for installation and wiring

1. The drive should be taken out of the packing box properly keeping in mind its weight.
2. Installation of drive should be carried out on solar structure with proper ground clearance and specified nuts and bolts.
3. Install it vertically on the pole (maximum inclination allowed is 15 degrees only).
4. Pay attention to the installing place to guarantee the effective heat dissipation.
5. Screw the nuts and bolts and make sure they tightened nut and bolt properly. Connect the earthing wire at the bolting place.
6. Connect the plug in PV inputs to the drive. Please refer labeled diagram of drive.
7. After that follow instructions given in chapter 4 of this manual.
8. Connect the output plug in connector to the load.

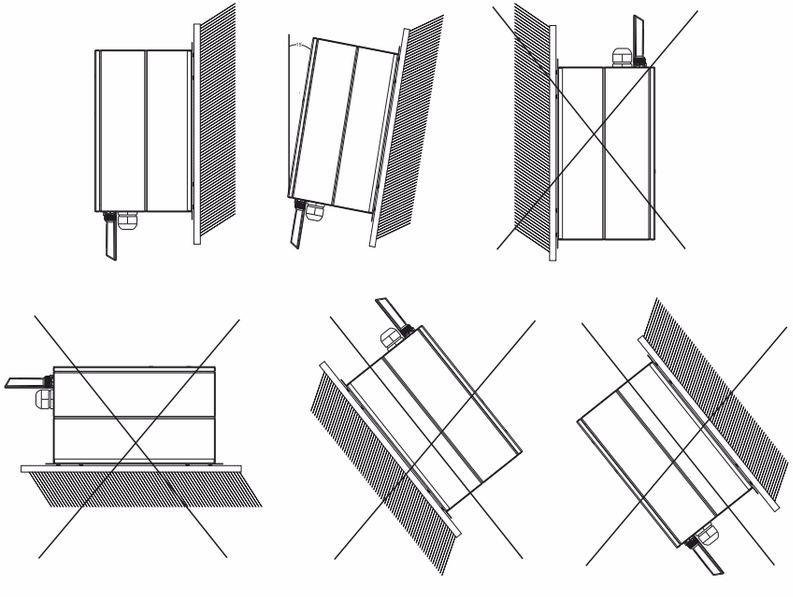

Figure 3.1 Correct and Incorrect installation of drive

CHAPTER 4: BASIC OPERATION

4.1 Display Module Description

Following figure 4.1 is indicates the outer look of Display. It has six buttons, three LED indicators, one 143 X 118 mm LCD Display.

Figure 4.1 LCD Module

4.2.Button Description and Operation

Button	Functionality
Power	• To Turn ON the Motor
Power	• To Turn OFF the Motor
ESC	• Previous Screen
UP Arrow	• Used for Scrolling up • For increasing the parameter values in Configuration menu
Down Arrow	• Used for Scrolling down • For decreasing the parameter values in Configuration menu
ENTER	• Selection

4.2 LCD Operation

- Startup

Upon starting the unit for the first time, the LCD Display enters into Factory Setup interface. In factory setup, the user gets an option to set various parameter required for the proper functioning of the product which are illustrated in the figure 4.2.

Scroll through various options displayed on the screen with the up & down buttons and press Enter to set the parameter and Esc to exit the particular option. The Date & INSTALL DATE are set in the format DD/MM/YY and the Time in HH:MM:SS. Other options are common to factory setup option in main menu therefore, are discussed in section c of CONFIGURE.

After the successful starting of the product or whenever the LCD is not operated for a period of time, 6 status screens appears in rolling until menu button is pressed.

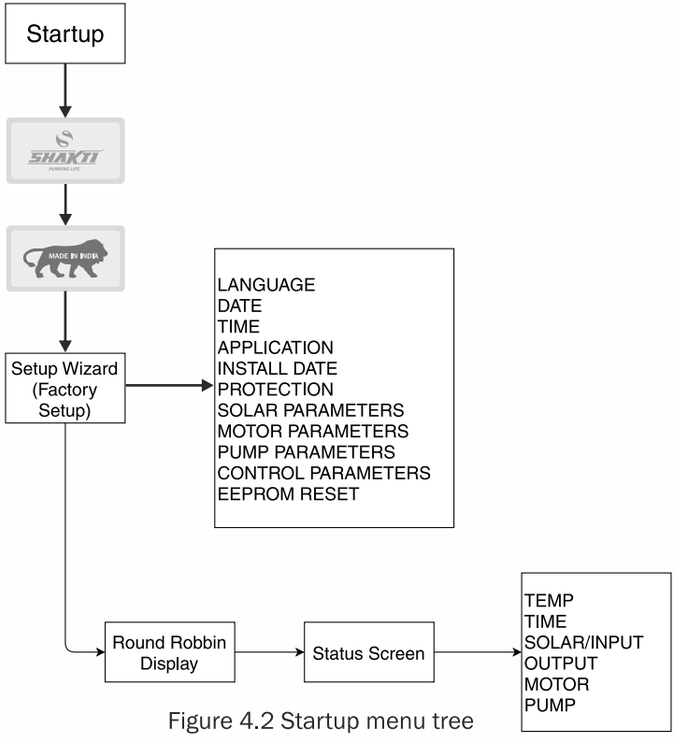

Figure 4.2 Startup menu tree

- Main Menu

In the main menu user can change the setting or get information by transferring from one interface to another. The STATUS, CONTROL, and CONFIGURE, are discussed separately in further sections. FAULT LOG, Rs232 extract and RS485 extract data can be viewed in LOGS. The ABOUT section provides the information of firmware version, serial number & network details.

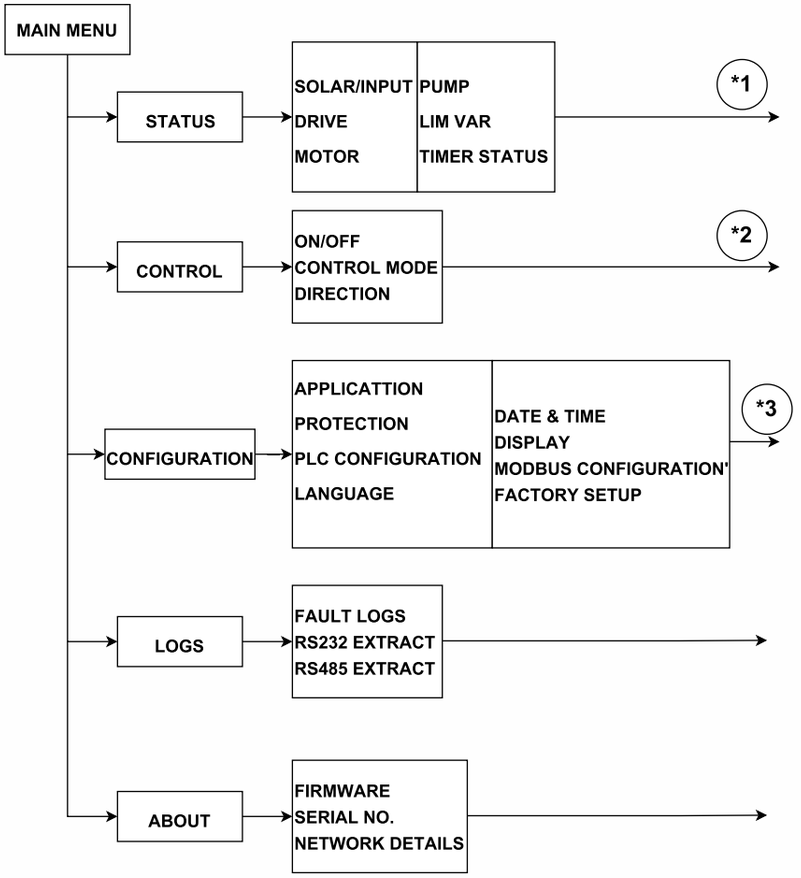

Figure 4.3 Main menu tree

▸ STATUS (*1)

a) SOLAR/INPUT

This status shows either the real time parameters of SOLAR or INPUT depending upon the APPLICATION selected. In SOLAR mode the real time PV condition of the system, such as input voltage (V), input current (A), input power (W), open circuit voltage (V), short circuit current (A), maximum power (W), MPP voltage (V), and cumulative energy (kWh) are visible in status. Similarly, in case of INPUT mode parameters are: as input voltage (V), input current (A), input frequency (Hz).

b) DRIVE

This status shows the real time condition of Variable Frequency Drive of the system, such as output voltage (V), output current (A), output frequency (Hz), and output power (W).

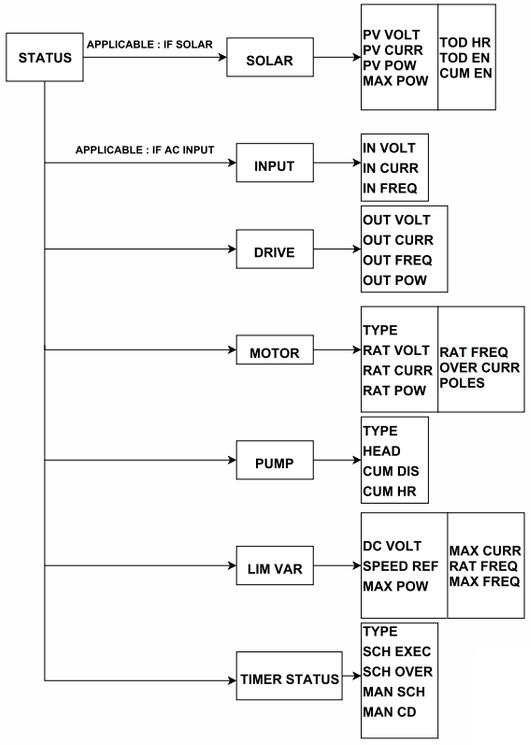

Figure 4.4 STATUS menu tree

c) MOTOR

This status shows the real time data of the Motor driving the pump, such as type of the motor selected for operation, rated voltage (V), instantaneous current (A), rated power (HP), rated frequency (Hz), operating speed (RPM), and number of poles.

d) PUMP

This status shows the real time PUMP condition connected to the system, such as type of the pump, head (m), cumulative discharge (kL), and cumulative hour (Hr).

e) Limit VAR

This status shows the speed limit indication. Used by authorized technician/service personnel to debug the cause of speed limit. Their corresponding flag indicates 0 or 1. 0 indicates the following reason is not responsible for the speed limit and vice versa. These are the following reasons for the speed limit:

S.No.	Reasons	FLAG	Detail
1. DC voltage	1 DC voltage limits the speed		
2. Speed Ref	1 speed reaches to its set speed		
3. Max Pow	1 power reaches to set max power		
4. Max Curr	1 current reaches to set max current		
5. Rated Freq	1 frequency reaches to set rated frequency		
6. Max Freq	1 frequency reaches to set max frequency		

f) Timer Status

This status indicates the flag for timers, which are given below:

Type of timer: Scheduler type or Countdown type

Schedule execution: When the scheduler is executing that time this flag shows 1 otherwise 0.

Scheduler Over: When scheduler execution completes this flag goes to 1.

Manual Scheduler: This indicates the manual start-up in scheduler mode.

Manual countdown: This indicates the manual start-up in countdown mode.

▸ CONTROL (*2)

a) ON/OFF

Whenever ON option is selected the motor will turn on until it is turned off manually or when some fault is generated.

b) CONTROL MODE

The motor can be operated in any of the four modes: AUTO, MANUAL, SPEED CONTROL, JOG & Timer control. If SOLAR is selected in APPLICATION, JOG mode can be accessed. But if APPLICATION is GRID, SPEED CONTROL mode is available. To start the motor in JOG mode press Enter button inside the ENTER THE JOG option, Until the Enter button is pressed motor is in running state. Releasing the button will lead to stopping of the motor.

In TIMER CONTROL the “ON” time of motor is controlled based on the inbuilt timer of the device. The timer has two modes : countdown and scheduler, which can be selected via type of timer. The instant of turn ON and duration can be configured in the scheduler configuration menu of the timer.

Countdown Type: In this mode, the motor is started manually by pressing ON button in the display or via mobile app. Once the motor has started, a countdown corresponding to duration is managed and displayed. The maximum duration can be set up to 999 minutes.

Scheduler Type: In this mode the motor start time and duration can be set for a week which will repeat in round robin.

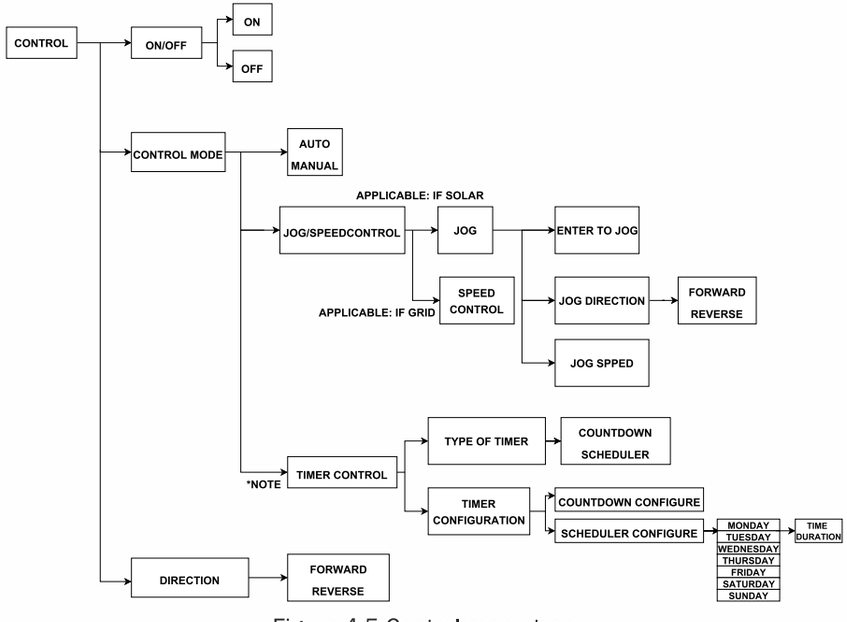

Figure 4.5 Control menu tree

▸ CONFIGURE *3

a) APPLICATION - This system can work for three applications: Solar & Grid.

b) PROTECTION - The protection limit for various parameters can be set according to the requirements by entering the correct password.

c) PLC CONFIGURATION - This section describes the usage of control inputs for this drive. There are 8 digital inputs, 2 analog inputs and 2 analog outputs available in the terminal connection block as shown in the fig.2.1. Moreover, a non-regulated power supply of 20-24V, 100mA is also available on the terminal block.

The SHAKTI drives uses a MACRO based configuration for control purpose. The control input functionality and MACRO description is given in the Application Note: Control Input configuration which is available in the controller section in the link given below:

https://www.shaktipumps.com/download-catalogues.php

d) FACTORY SETUP - A security password is required to access this menu block.

i. SOLAR PARAMETERS -
According to PV panels connected to the system parameters shown in the figure 4.6 can be set.

ii. MOTOR PARAMETERS
First the type of the motor is selected and by entering into the selected motor the rated parameters of that specific motor can be set.

iii. PUMP PARAMETERS
After selecting the pump to be operated the parameters specific to that pump can be configured.

iv. CONTROL PARAMETERS
The number of options available under control parameters varies with different models of the product.
The Toggle Switch is provided in customized models which provides the facility of turning ON and OFF the pump without operating the LCD power button.

v. DONGLE DATA CONFIGURATION
Erasing dongle data can be done by authorized technician/service personnel. Users are not allowed to erase the data of the dongle.

vi. EEPROM RESET
EEPROM can be reset only by authorized technician/service personnel. Users are not allowed to reset the EEPROM since it may cause malfunctioning of the unit.

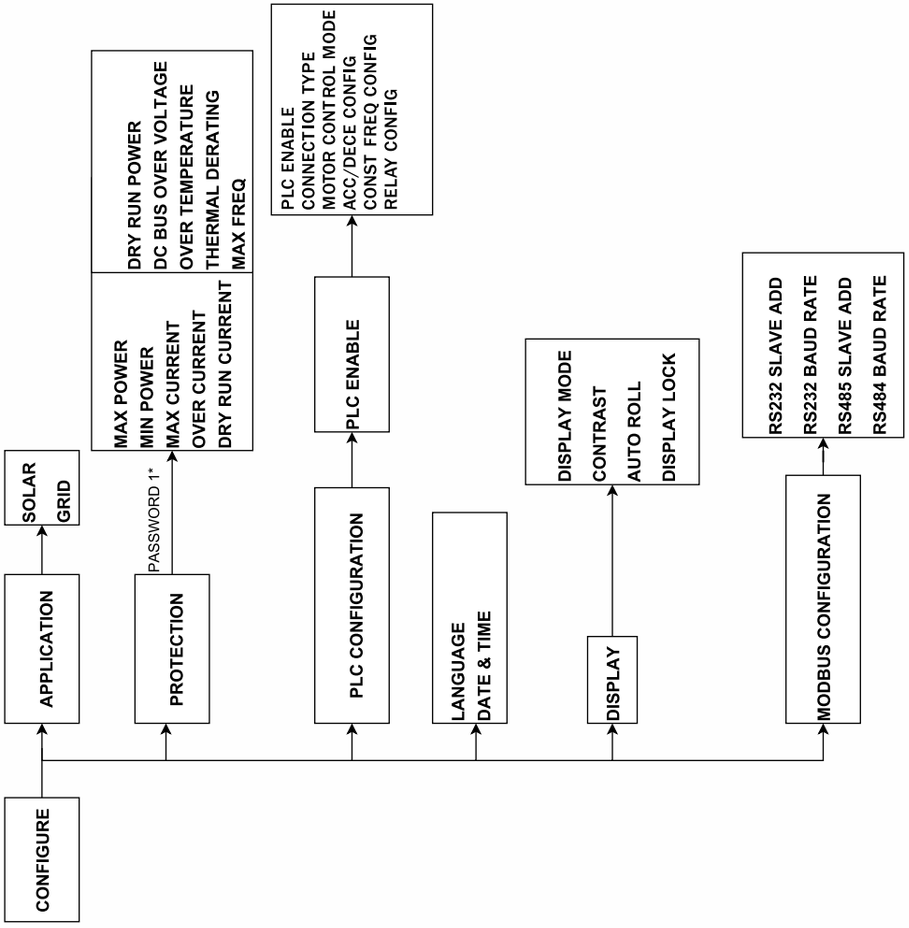

Figure 4.6 Configure menu tree

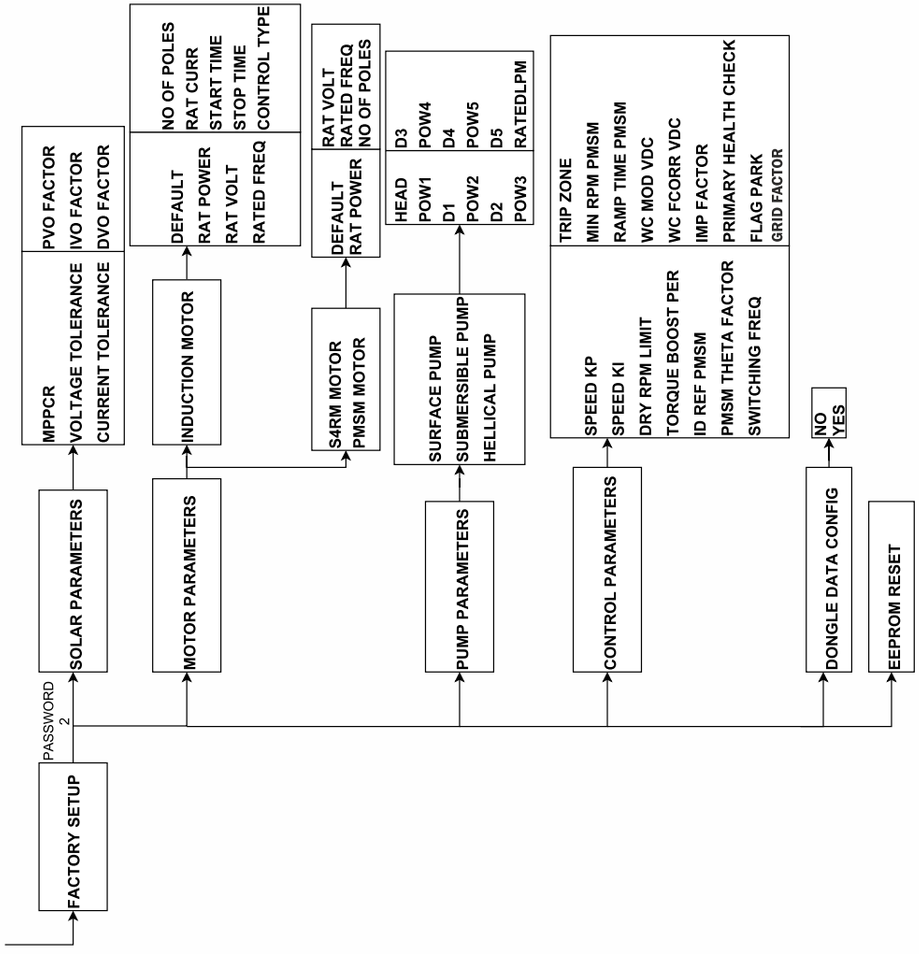

Figure 4.6 Configure menu tree

CHAPTER 5 : NUMERICAL DISPLAY INFORMATION

The shakti display has got an unique feature that all the pages can be uniquely located with the use of words as well as numerals also. The location of pages wrt numerals has a definite sequence as described below:
Table 5.1 contains all parameters with their display number.

No numbers are displayed corresponding to ROLLING PAGES and MENU. Once someone enters the menu, all the pages are numbered based on their sequential location in the menu.
For e.g., CONTROL is at 2nd location and is therefore designated as 2 in the front. Any page inside CONTROL will start with 2. For example ON/OFF page is at 1st location inside CONTROL page so, it's numeral designator is 21, wherein 2 corresponds to CONTROL PAGE and 1 corresponds to the first page inside page number 2.
Another example, To understand numeral location of RATED FREQUENCY of PMSM is given below:

3 CONFIGURE >> 8 FACTORY SETUP >> 2 MOTOR PARAMETERS >>3 PMSM MOTOR>> 4 RATED FREQ.
Hence, Numeral designator for RATED FREQ of PMSM is 38234, which signifies go to the 3rd page of menu to reach CONFIGURATION then go to 8th location of CONFIGURATION to reach FACTORY SETUP(page 38). Then enter the 2nd location of page 38 to reach MOTOR PARAMETERS (page 382) then enter into 3rd location to go to PMSM MOTOR(page 3823) there go to 4th location which is RATED FREQ(page 38234).

All parameters and pages are numbered as per the above description. Except when the location inside a page is more than 9 then the designator is added with an extra underscore for example - 12th location inside any page is designated as _12.
E.g., Numeral designator of ACCELERATION RATE1 is 3821_10
For ease of customers, the page numbers are displayed on the top and locations are displayed in front of all the parameters.

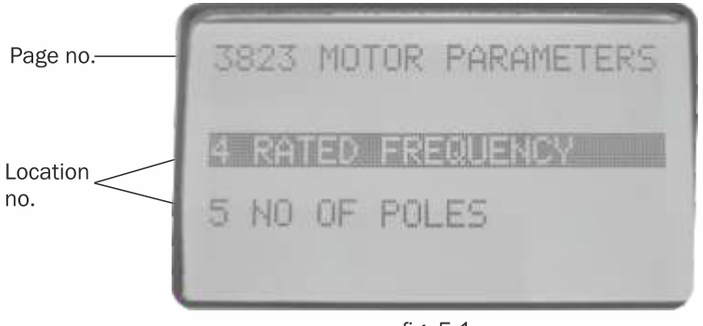

fig. 5.1

0	MENU
1	STATUS
11	INPUT
12	DRIVE
13	MOTOR
14	PUMP
15	LIMIT VAR
16	TIMER STATUS
17	TEMPERATURE
18	DEBUG
2	CONTROL
21	ON/OFF
211	ON
212	OFF
22	CONTROL MODE
221	AUTO
222	MANUAL
223	SPEED CONTROL
224	JOG
2241	ENTER TO JOG
2242	JOG DIRECTION
22421	FORWARD
22422	REVERSE
2243	JOG SPEED
225	TIMER CONTROL
2251	TYPE OF TIMER
22511	COUNTDOWN
22512	SCHEDULER
2252	TIMER CONFIG
22521	COUNTDOWN CONFIGURE
22522	SCHEDULER CONFIGURE
225221	MONDAY CONFIG
2252211	TIME
2252212	DURATION
225222	TUESDAY CONFIG
2252221	TIME
2252222	DURATION
225223	WEDNESDAY CONF
2252231	TIME
2252232	DURATION
225224	THURSDAY CONFI
2252241	TIME
2252242	DURATION
225225	FRIDAY CONFIG
2252251	TIME
2252252	DURATION

225226	SATURDAY CONFI
2252261	TIME
2252262	DURATION
225227	SUNDAY CONFIG
2252271	TIME
2252272	DURATION
23	DIRECTION
231	FORWARD
232	REVERSE
3	CONFIGURE
31	APPLICATION
311	SOLAR
312	GRID
32	PROTECTION
321	MAX POWER
322	MIN POWER
323	MAX CURRENT
324	OVER CURRENT
325	DRY RUN CURRENT
326	DRY RUN POWER
327	DC BUS OVER VOLTAGE
328	OVER TEMPERATURE
329	THERMAL DERATING
32_10	MAX FREQ
33	PLC CONFIGURATION
331	PLC ENABLE
3311	NO
3312	YES
332	CONNECTION TYPE
333	MOTOR CONTROL MODE
3331	VS CONTROL
33311	VS MIN VALUE
33312	VS MIN PERCENTAGE
33313	VS MAX VALUE
33314	VS MAX PERCENTAGE
33315	SENSE DELAY SET
3332	AI CONTROL
33321	AI MIN VALUE
33322	AI MIN PERCENTAGE
33323	AI MAX VALUE
33324	AI MAX PERCENTAGE
33325	SENSE DELAY SET
3333	DIS FREQ CONFIG
3334	RS485 RPM CONTROL
3335	RS485 FRQ CONTROL
334	ACC/DECE CONFIG
3341	ACC CONFIG

33411	ACC CONFIG1
33412	ACC CONFIG2
3342	DECE CONFIG
33421	DECE CONFIG1
33422	DECE CONFIG2
335	CONST FREQ CONFIG
3351	FREQ REF1
3352	FREQ REF2
3353	FREQ REF3
336	RELAY CONTROL CONFI
3361	RELAY ONE CONFIG
33611	RELAY1 ENABLE
336111	NO
336112	YES
33612	RELAY1 FUNCTION
336121	FAULT
3362	RELAY TWO CONFIG
33621	RELAY2 ENABLE
336211	NO
336212	YES
33622	RELAY2 FUNCTION
336221	FREQUENCY DETECT
336222	STOP-SIGNAL FRQ
336223	UV SIGNAL
336224	OL EARLY WARNING
336225	RUN INDICATE
336226	Fmax REACHED
336227	SPEED1 REACHED
336228	SPEED2 REACHED
336229	SPEED3 REACHED
34	SELECT LANGUAGE
341	ENGLISH
35	DATE & TIME
351	SET DATE
352	SET TIME
36	DISPLAY
361	DISPLAY MODE
3611	ROLLING PAGES
3612	SHAKTI SCREEN
362	CONTRAST
363	AUTOROLL
3631	YES
3632	NO
364	DISPLAY LOCK
3641	YES
3642	NO
3643	CHANGE PASSWORD

37	MODBUS CONFIG
371	RS232 SLAVE ADD
372	RS232 BAUD RATE
373	RS485 SLAVE ADD
374	RS485 BAUD RATE
38	FACTORY SETUP
381	SOLAR PARAMETERS
3811	MPPCR
3812	VOLTAGE TOLERANCE
3813	CURRENT TOLERANCE
3814	PVO FACTOR
3815	IVO FACTOR
3816	DVO FACTOR
382	MOTOR PARAMETERS
3821	INDUCTION
38211	DEFAULT
38212	RATED POWER
38213	RATED VOLTAGE
38214	RATED FREQUENCY
38215	NO OF POLES
38216	RATED CURRENT
38217	CONTROL TYPE
382171	SCALAR
382172	VECTOR
38218	ACCELERATION RATE
38219	DECELERATION RATE
3821_10	ACCELERATION RATE1
3821_11	DECELERATION RATE1
3822	S4RM
38221	DEFAULT
38222	RATED POWER
38223	RATED VOLTAGE
38224	RATED FREQUENCY
38225	NO OF POLES
3823	PMSM
38231	DEFAULT
38232	RATED POWER
38233	RATED VOLTAGE
38234	RATED FREQUENCY
38235	NO OF POLES
383	PUMP PARAMETERS
3831	SURFACE PUMP
38311	HEAD
38312	POW1
38313	D1
38314	POW2
38315	D2

38316	POW3
38317	D3
38318	POW4
38319	D4
3831_10	POW5
3831_11	D5
3831_12	RATED LPM
3832	SUBMERSIBLE PUMP
38321	HEAD
38322	POW1
38323	D1
38324	POW2
38325	D2
38326	POW3
38327	D3
38328	POW4
38329	D4
3832_10	POW5
3832_11	D5
3832_12	RATED LPM
3833	HELICAL PUMP
38331	HEAD
38332	POW1
38333	D1
38334	POW2
38335	D2
38336	POW3
38337	D3
38338	POW4
38339	D4
3833_10	POW5
3833_11	D5
3833_12	RATED LPM
384	CONTROL PARAMETERS
3841	SPEED KP
3842	SPEED KI
3843	DRYRUN RPM LIMIT
3844	TORQUE BOOST PER
3845	ID REF PMSM
3846	PMSM THETA FACTOR
3847	SWITCHING FREQ
3848	TRIP ZONE
3848_1	YES
3848_2	NO
3849	MIN RPM PMSM
384_10	RAMP TIME PMSM
384_11	WC MOD VDC

384_12	WC FCORR VDC
384_13	IMP FACTOR
384_14	PRIMARY HEALTH CHK
384_14_1	DISABLE
384_14_2	ENABLE
384_15	FLAG PARK
384_15_1	DISABLE
384_15_2	ENABLE
384_16	GRID FACTOR
385	DONGLE DATA CONFIG
3851	NO
3852	YES
386	BOOT MODE OPTIONS
3861	SERIAL BOOT MODE
387	EEPROM RESET
3871	NO
3872	YES
4	LOGS
41	FAULT LOGS
42	RS232 EXTRACT
421	DAY DATA EXTRACT
422	YEAR DAT EXTRACT
423	FAULT DATA EXTRACT
43	RS485 EXTRACT
431	DAY DATA EXTRACT
432	YEAR DAT EXTRACT
434	FAULT DATA EXTRACT
5	ABOUT
51	FIRMWARE
52	SERIAL NUMBER
521	DRIVE SERIAL NO.
522	DONGLE SERIAL NO.
53	NETWORK DETAILS

CHAPTER 6 : FAULT DIAGNOSIS AND SOLUTION

This chapter describes the drive faults, related messages on LCD display, possible reasons of fault and their troubleshooting.

6.1 Fault Type

Type	Drive action when fault happen
Drive fault	If any fault is detected it will occur in following manner • Fault information will be shown at LCD display • Output of drive will be cut-off and motor will decelerate and stop.
External fault	For monitoring and protecting drive external signal can be given which can trip the drive.

Table 5.1 Fault type

SHAKTI PUMPING LIFE

6.1.1 Fault information and description in detail

Fault Type	LCD Display Message	Possibility Reason/s(reasons do not limit to the following given reasons)	Troubleshooting
Low Power	01 LOW POWER	1.Low input power due to lesser intensity of sunlight or shadow on panels. 2. PV panels may not be in a healthy condition. 3. Solar power is less than minimum PV power settings.	1. Check is there low intensity of sunlight. If yes wait till proper sunlight come. 2. Decrease minimum input power settings.
DC Bus Under voltage	02 DC BUS UNDER VOLTAGE	1.Low input power due to lesser intensity of sunlight or shadow on panels. 2. PV panels may not be in a healthy condition. 3. Instantaneous High power drawn by motor due to mechanical Jam(Pump/Motor)	1. Check is there low intensity of sunlight. If yes wait till proper sunlight come. 2. Decrease minimum input power settings. 3. Check and clean motor pump set
DC Bus Over voltage	03 DC BUS OVER VOLTAGE	1. DC bus voltage in the drive is more than the voltage set	1. Check the no. Of PV cells connected in series. 2. Make sure the voltage is less than the voltage mentioned in the specification sheet on page no.7. 3. Contact customer care
Output Over voltage	04 OUTPUT OVER VOLTAGE	1. When the output side voltage is high when the drive is OFF	1. Check if input is connected at right place. 2. Hardware failure 3. Contact customer care
Dry Run	05 DRY RUN DETECTED	1. No water available on the suction / inlet side of pump	1. Check for availability of water at pump inlet. 2. Wait for water to come in, in case of submersible motor. 3. Check water level in water tank in case of surface motor. 4. Kindly do the priming properly.
Over Temperature	06 OVER TEMP PROTECTED	1. The drive heating is more than expected. 2. Improper ventilation	1. Check for ventilation and mounting style. 2. Contact customer care
Over Current at Output(RMS value of output current more than set value in drive parameters in factory setup)	07 OVER CURRENT DETECTED	1. Wrong values set (for rated current) in the factory setup. 2. Mismatch of connected load and selected parameters.	1. Set right value in the rated current parameter. 2. Check the output load connected. 3. Contact customer care
Short Circuit Trip	08 SHORT CIRCUIT TRIP	1. Any of the connection internal or output is shorted. 2. Voltage is too low. 3. A sudden load	1. Correct shorted connection . 2. Check insulation health of cable 3. Contact customer care
High Inrush Current	09 HIGH INRUSH CURRENT	1. Sudden increase in load 2. Wrong motor selected. 3. Cable joint not proper.	1. Select the proper motor and also select correct motor in menu. 2. Make proper joint of cable. 3. Contact customer care
OUTPUT OPEN CIRCUIT	10 OUTPUT OPEN CIRCUIT	1.Occurs during the operation when any of the output is opened	1. Check whether motor is connected at the output.
PMSM Start Fail	11 PMSM START FAIL	1. Starting Torque not enough. 2. Mechanical Jam(Pump/Motor)	1. Increase the torque boost % parameter value. 2. Increase INIT_RAMP_TIME_PMSM prarameter value.

*This is not a fault but a warning.

Table 5.2 Fault information and description

Note : In case of remote monitoring the motor will not turn on and the fault status can be seen in menu under fault report.

If the short circuit fault occurs:
1. Remove the motor connection and run the drive.
2. If the drive runs OK
a. Check the loose connection of motor wire in the connector side, some strands may be touching.
b. Check the cable for the motor.
c. Check the megger of the motor and motor winding related problems.
Reason for low power and DC bus under voltage:
1. Check dust deposition on the solar panel.
2. Check the direction of solar panels.

CHAPTER 7 : NANDI MODBUS COMMUNICATION PROTOCOL

7.1 COM Port setting :

- RS485 in half duplex mode
- Port Setting:- Baud Rate -9600, Data Bits-8, Stop Bits-1, Parity-None

7.2 RTU Frame Structure :

Slave address	0X01
Function field	0x03 :Read single parameter
0x06 :	Write single parameter
Data field	Data field includes address field and data load domain
CRC field	16bit CRC check value

7.2.1 Function Code : 0X03

This function code is used to read the contents of a contiguous block of registers but in Simha 2.0 only single register can be read, multiple read is not supported

Request	Hex	Response	Hex
Slave address	0X01	Slave address	0x01
Command	0x03	Command	0x03
High bit of register starting address	0X06	Byte count	0x02
Low bit of register starting address	0X01	High bit of register value	0X00
High bit of register number	0X00	Low bit of register value	0X01
Low bit if register number	0x01	CRC low bit	-------
CRC low bit	------	CRC high bit	-------
CRC high bit	------		

Query–

Slave Address	Function Code	Register Address High	Register Address Low	High Register No	Low Register No	CRC Low	CRC High
0X01	0X03	--------	----------	0x00	0X01	---------	---------

Response—

Slave Address	Function Code	Byte Count	High bit	Low bit	CRC Low	CRC High
0X01	0X03	0X02	----------	---------	---------	---------

Positive response

The response function code echoes the request function code

Slave Address	Function Code	Register Address High	Register Address Low	High Register No	Low Register No	CRC Low	CRC High
0X01	0X06	--------	----------	0x00	0X01	---------	---------

Note:-
·If some error come then there is no response form drive
·Minimum time interval between two request is 500ms

7.3 MODBUS Address

S.No.	Configuration Parameters	SIZE	MODBUS ADDRESS (DEC)	OFFSET	Min	Max	Default	Scale Factor	Unit	Description
1	FACTORY MODE	Char	256	1	0	1	1	1	NA	FACTORY_MODE
2	LANGUAGE	Char	257	1	0	0	0	1	NA	LANGUAGE_SELECTED
3	INSTALL DATE	Char	258	1	1	31	1	1	NA	INST_DATE
4	INSTALL MONTH	Char	259	1	1	12	1	1	NA	INST_MONTH
5	INSTALL YEAR	Char	260	1	18	99	21	1	NA	INST_YEAR
6	APPLICATION	Char	261	1	0	1	1	1	NA	APP_MODE
7	AUTOROLL ENABLE	Char	262	1	1	2	1	1	NA	ROLLING_PAGE_ENABLE
8	LCD CONTRAST	Char	263	1	27	39	33	1	%	LCD_CONTRAST
9	DISPLAY MODE	Char	264	1	1	2	1	1	NA	DISPLAY_MODE_FLAG
10	ENERGY ERASE FLAG	Char	265	1	1	2	2	1	NA	ENERGY_ERASE_FLAG
11	FAULT ADDRESS POINTER	Char	266	1	0	255	0	1	NA	Fault_Address_Pointer
12	DATE	Char	267	1	1	31	1	1	NA	date
13	MONTH	Char	268	1	1	12	1	1	NA	month
14	YEAR	Char	269	1	1	99	1	1	NA	year
15	ON HOUR MOTOR	Char	270	1	1	12	1	1	NA	ON_HOUR_MOTOR
16	ON MINUTE MOTOR	Char	271	1	0	59	1	1	NA	ON_MINUTE_MOTOR
17	OFF HOUR MOTOR	Char	272	1	1	12	1	1	NA	OFF_HOUR_MOTOR
18	OFF MINUTE MOTOR	Char	273	1	0	59	1	1	NA	OFF_MINUE_MOTOR
20	RS232 BAUD RATE	Char	275	1	1	6	2	1	NA	RS232_BAUD_RATE
21	RS485 BAUD RATE	Char	276	1	1	6	2	1	NA	RS485_BAUD_RATE
22	MODBUS ADD RS232	UINT_16	277	2	1	99	1	1	NA	MODBUS_ADD_RS232
23	MODBUS ADD RS485	UINT_16	279	2	1	99	1	1	NA	MODBUS_ADD_RS485
26	TIMER ENABLE FLAG	Char	285	1	0	1	0	1	NA	TIMER_ENABLE_FLAG
27	TIMER TYPE	Char	286	1	0	1	0	1	NA	TIMER_TYPE
28	SCHEDULE OVER FLAG	Char	287	1	0	1	0	1	NA	SCHEDULE_OVER_FLAG
29	COUNTDOWN START CHECK	Char	288	1	0	1	0	1	NA	COUNTDOWN_START_CHECK
32	DISPLAY LOCK ENABLE	Char	289	1	1	2	2	1	NA	DISPLAY_LOCK_ENABLE
33	DISPLAY PASSWORD CHECK	UINT_16	290	2	0	999	345	1	NA	DISPLAY_PASSWORD_CHECK
34	COUNTDOWN_TIMER_DURATION	UINT_16	292	2	1	999	1	1	NA	COUNTDOWN_TIMER_DURATION
35	MON_SET_TIME	UINT_16	294	2	0	2400	1	1	NA	MON_SET_TIME
36	MON_TIME_DURATION	UINT_16	296	2	1	999	1	1	NA	MON_TIME_DURATION
37	TUE_SET_TIME	UINT_16	298	2	0	2400	1	1	NA	TUE_SET_TIME
38	TUE_TIME_DURATION	UINT_16	300	2	1	999	1	1	NA	TUE_TIME_DURATION
39	WED_SET_TIME	UINT_16	302	2	0	2400	1	1	NA	WED_SET_TIME
40	WED_TIME_DURATION	UINT_16	304	2	1	999	1	1	NA	WED_TIME_DURATION
41	THR_SET_TIME	UINT_16	306	2	0	2400	1	1	NA	THR_SET_TIME
42	THR_TIME_DURATION	UINT_16	308	2	1	999	1	1	NA	THR_TIME_DURATION
43	FRI_SET_TIME	UINT_16	310	2	0	2400	1	1	NA	FRI_SET_TIME
44	FRI_TIME_DURATION	UINT_16	312	2	1	999	1	1	NA	FRI_TIME_DURATION
45	SAT_SET_TIME	UINT_16	314	2	0	2400	1	1	NA	SAT_SET_TIME
46	SAT_TIME_DURATION	UINT_16	316	2	1	999	1	1	NA	SAT_TIME_DURATION
47	SUN_SET_TIME	UINT_16	318	2	0	2400	1	1	NA	SUN_SET_TIME
48	SUN_TIME_DURATION	UINT_16	320	2	1	999	1	1	NA	SUN_TIME_DURATION
49	SCHEDULE_MINUTE_PASSED	UINT_16	322	2	0	999	0	1	NA	SCHEDULE_MINUTE_PASSED

S.No.	VFD Parameters	SIZE	MODBUS_ADDRESS(DEC)	OFFSET	Min	Max	Default	Scale Factor	Unit	Descriptiom
1	MASTER ON OFF	Char	1000	1	0	1	0	1	NA	MASTER_ON_OFF
2	CONTROL MODE	Char	1001	1	1	5	2	1	NA	SPEED_MODE_SELECT
3	DIRECTION	Char	1002	1	1	2	1	1	NA	SPEED_DIRECTION_SELECT
4	LOCK_UNLOCK	Char	1003	1	0	1	0	1	NA	LOCK_UNLOCK
5	MIN POWER	UINT_16	1004	2	0	9999	1000	1	W	MIN_PV_POWER
6	MAX CURRENT	UINT_16	1006	2	1	170	70	1	A	MAX_CURRENT_EEPROM
7	OVER CURRENT	UINT_16	1008	2	2	130	65	1	A	OVER_CURR_LIMIT_EEPROM
8	DRY RUN CURRENT	UINT_16	1010	2	1	50	10	1	A	DRY_RUN_LIMIT
9	DRY RUN POWER	UINT_16	1012	2	100	8000	1000	1	W	DRY_RUN_POWER
10	DC BUS OVER VOLTAGE	UINT_16	1014	2	300	855	850	1	V	DC_BUS_OV_LIMIT_EEPROM
11	OVER TEMPERATURE	UINT_16	1016	2	40	115	110	1	°C	OVER_TEMP_LIMIT
12	THERMAL DERATING	UINT_16	1018	2	0	200	100	1	%	THERMAL_DERATING_FACTOR
13	MAX FREQ	UINT_16	1020	2	1	400	120	1	Hz	MAX_FREQ_SET

SHAKTI PUMPING LIFE

S.No.	Motor Parameters	SIZE	MODBUS_ADDRESS(DEC)	OFFSET	Min	Max	Default	Scale Factor	Unit	Descriptiom
1	MOTOR TYPE	Char	2000	1	0	2	2	1	NA	MOTOR_TYPE
2	CONTROL TYPE	Char	2001	1	0	1	0	1	NA	CONTROL_TYPE
3	TORQUE PERCENT	UINT_16	2002	2	0	2	2	1	%	TORQUE_PERCENT
4	POWER FACTOR	UINT_16	2004	2	60	100	75	100	NA	POWER_FACTOR
5	RATED POWER	UINT_16	2006	2	25	80	25	10	HP	MOTOR_POWER
6	RATED CURRENT	UINT_16	2008	2	1	150	50	1	A	MOTOR_RATED_I
7	LEAKAGE INDUCTANCE	UINT_16	2010	2	5	999	56	10000	H	Lls
8	MAGNETIC INDUCTANCE	UINT_16	2012	2	20	9999	881	10000	H	Lm
9	ROTOR RESISTANCE	UINT_16	2014	2	20	9999	33	100	Ohm	Rr
10	STATOR RESISTANCE	UINT_16	2016	2	20	9999	43	100	Ohm	Rs
11	RATED VOLTAGE INDUCTION	UINT_16	2018	2	30	560	456	1	V	MOTOR_VOLTAGE_IND
12	RATED VOLTAGE S4RM	UINT_16	2020	2	30	560	456	1	V	MOTOR_VOLTAGE_S4RM
13	RATED VOLTAGE PMSM	UINT_16	2022	2	30	560	360	1	V	MOTOR_VOLTAGE_PM
14	RATED FREQUENCY INDUCTION	UINT_16	2024	2	0	400	60	1	Hz	MOTOR_RATED_FREQ_IND
15	RATED FREQUENCY S4RM	UINT_16	2026	2	0	400	60	1	Hz	MOTOR_RATED_FREQ_S4RM
16	RATED FREQUENCY PMSM	UINT_16	2028	2	0	400	120	1	Hz	MOTOR_RATED_FREQ_PMSM
17	NO OF POLES INDUCTION	UINT_16	2030	2	2	8	2	1	NA	IND_MOTOR_POLES
18	NO OF POLES S4RM	UINT_16	2032	2	2	8	2	1	NA	S4RM_MOTOR_POLES
19	NO OF POLES PMSM	UINT_16	2034	2	2	8	4	1	NA	PMSM_MOTOR_POLES
20	REFERENCE SPEED	UINT_16	2036	2	1	5999	500	1	RPM	SPEED_REF_INPUT_DISPLAY
31	FLAG PARK	Char	2042	1	0	1	1	1	NA	FLAG_PARK

S.No.	Pump Parameters	SIZE	MODBUS_ADDRESS(DEC)	OFFSET	Min	Max	Default	Scale Factor	Unit	Descriptiom
1	PUMP TYPE	Char	3000	1	0	2	1	1	NA	PUMP_TYPE
2	PUMP HEAD	UINT_16	3001	2	5	9999	100	1	m	PUMP_HEAD
3	POW1	UINT_16	3003	2	0	65000	1000	1	W	POW1
4	D1	UINT_16	3005	2	0	9999	80	1	LPM	D1
5	POW2	UINT_16	3007	2	0	65000	3000	1	W	POW2
6	D2	UINT_16	3009	2	0	9999	150	1	LPM	D2
7	POW3	UINT_16	3011	2	0	65000	4500	1	W	POW3
8	D3	UINT_16	3013	2	0	9999	250	1	LPM	D3
9	POW4	UINT_16	3015	2	0	65000	8500	1	W	POW4
10	D4	UINT_16	3017	2	0	9999	400	1	LPM	D4
11	POW5	UINT_16	3019	2	0	65000	12000	1	W	POW5
12	D5	UINT_16	3021	2	0	9999	500	1	LPM	D5
30	FLOW METER FLAG	Char	3023	1	1	3	1	1	NA	FLOW_METER_FLAG
13	FLOW METER VALUE	UINT_16	3024	2	0	999	0	1	LPM	FLOW_METER_VALUE
50	RATED_LPM	UINT_16	3026	2	0	1000	100	1	LPM	RATED_LPM

S.No.	Solar Parameters	SIZE	MODBUS_ADDRESS(DEC)	OFFSET	Min	Max	Default	Scale Factor	Unit	Descriptiom
1	MPPCR	UINT_16	4000	2	10	9999	150	1	NA	MPPT_CALL_RATE
2	VOLTAGE TOLERANCE	UINT_16	4002	2	1	999	50	1	NA	TOL_V
3	CURRENT TOLERANCE	UINT_16	4004	2	1	999	60	10	NA	TOL_I
4	PVO FACTOR	UINT_16	4006	2	1	300	20	100	W	VFD_VDC_KP
5	IVO FACTOR	UINT_16	4008	2	0	500	50	100	NA	VFD_VDC_KI
6	DVO FACTOR	UINT_16	4010	2	20	700	300	100	V	VFD_VDC_STEP

S.No.	Float Parameters	SIZE	MODBUS_ADDRESS(DEC)	OFFSET	Min	Max	Default	Scale Factor	Unit	Descriptiom
1	TOTAL TIME	UINT_32	5000	3	NA	NA	NA	1	Hr	TOTAL_TIME
2	TOTAL ENERGY	UINT_32	5004	3	NA	NA	NA	1	kWh	TOTAL_ENERGY
3	TOTAL FLOW	UINT_32	5008	3	NA	NA	NA	1	ML	TOTAL_FLOW
4	MAX POWER	UINT_32	5012	3	1000	80000	45000	1	W	MAX_PV_POWER
5	SWITCHING FREQ	UINT_32	5016	3	1600	16000	3200	1	Hz	SWITCHING_FREQ

S.No.	Control Parameters	SIZE	MODBUS_ADDRESS(DEC)	OFFSET	Min	Max	Default	Scale Factor	Unit	Descriptiom
1	TRIP ZONE	Char	7000	1	1	2	2	1	NA	TZ_ENABLE_FLAG
2	PRIMARY HEALTH CHECK	Char	7001	1	1	2	1	1	NA	HC_ENABLE_FLAG
3	AUX CONTROL	Char	7002	1	1	2	2	1	NA	TOGGLE_SWITCH_ENABLE
4	SPEED KP	UINT_16	7003	2	0	1000	5	100	NA	Speed_ErrorPI_PM_Kp
5	SPEED KI	UINT_16	7005	2	0	1000	2	100	NA	Speed_ErrorPI_PM_Ki
6	DRYRUN RPM LIMIT	UINT_16	7007	2	0	9999	2500	1	RPM	DRY_RUN_RPM_LIMIT
7	TORQUE BOOST PER	UINT_16	7009	2	0	150	30	1000	NA	INIT_VOLTPERCENT_FACTOR
8	Id REF PMSM	UINT_16	7011	2	0	400	0	10	NA	Id_Ref_PM
9	PMSM THETA FACTOR	UINT_16	7013	2	0	50	0	10	NA	PMSM_THETA_FACTOR
10	MIN RPM PMSM	UINT_16	7015	2	200	2000	500	1	RPM	PMSM_MIN_RPM
11	RAMP TIME PMSM	UINT_16	7017	2	30	400	90	10	s	INIT_RAMP_TIME_PMSM
12	WC MOD VDC	UINT_16	7019	2	10	4000	1000	1	NA	LPF_CUTOFF_VDC_MOD
13	WC FCORR VDC	UINT_16	7021	2	10	4000	400	1	NA	LPF_CUTOFF_VDC_FCORR
14	IMP FACTOR	UINT_16	7023	2	0	75	25	100	NA	IMP_FACTOR

S.No.	PLC Parameters	SIZE	MODBUS_ADDRESS(DEC)	OFFSET	Min	Max	Default	Scale Factor	Unit	Descriptiom
1	PLC ENABLE	Char	6000	1	1	2	1	1	NA	TERMINAL_MODE_SELECT
2	PLC CONNECTION TYPE	Char	6001	1	1	5	2	1	NA	PLC_CONNECTION_TYPE
3	FREQ CONTROL CONF	Char	6002	1	1	5	1	1	NA	FREQ_CONTROL_MODE
4	PLC IN1	Char	6003	1	1	16	1	1	NA	PLC_IN1
5	PLC IN2	Char	6004	1	1	16	1	1	NA	PLC_IN2
6	PLC IN3	Char	6005	1	1	16	1	1	NA	PLC_IN3
7	PLC IN4	Char	6006	1	1	16	1	1	NA	PLC_IN4
8	PLC IN5	Char	6007	1	1	16	1	1	NA	PLC_IN5
9	PLC IN6	Char	6008	1	1	16	1	1	NA	PLC_IN6
10	PLC IN7	Char	6009	1	1	16	1	1	NA	PLC_IN7
11	PLC IN8	Char	6010	1	1	16	1	1	NA	PLC_IN8
12	PLC IN1 SENSE DELAY	Char	6011	1	1	20	1	1	NA	PLC_IN1_SENSE_DELAY
13	PLC IN2 SENSE DELAY	Char	6012	1	1	20	1	1	NA	PLC_IN2_SENSE_DELAY
14	PLC IN3 SENSE DELAY	Char	6013	1	1	20	1	1	NA	PLC_IN3_SENSE_DELAY
15	PLC IN4 SENSE DELAY	Char	6014	1	1	20	1	1	NA	PLC_IN4_SENSE_DELAY
16	PLC IN5 SENSE DELAY	Char	6015	1	1	20	1	1	NA	PLC_IN5_SENSE_DELAY
17	PLC IN6 SENSE DELAY	Char	6016	1	1	20	1	1	NA	PLC_IN6_SENSE_DELAY
18	PLC IN7 SENSE DELAY	Char	6017	1	1	20	1	1	NA	PLC_IN7_SENSE_DELAY
19	PLC IN8 SENSE DELAY	Char	6018	1	1	20	1	1	NA	PLC_IN8_SENSE_DELAY
20	RELAY ONE ENABLE	Char	6019	1	1	2	1	1	NA	RELAY_ONE_ENABLE
21	RELAY TWO ENABLE	Char	6020	1	1	2	1	1	NA	RELAY_TWO_ENABLE
22	RELAY ONE FUN	Char	6021	1	0	0	0	1	NA	RELAY_ONE_FUN
23	RELAY TWO FUN	Char	6022	1	0	9	0	1	NA	RELAY_TWO_FUN
24	VOLTAGE SENSE MIN VALUE	UINT_16	6023	2	0	100	0	10	NA	Voltage sense min value
25	VOLTAGE SENSE MIN VALUE PER	UINT_16	6025	2	0	30	0	1	NA	Voltage sense min value per
26	VOLTAGE SENSE MAX VALUE	UINT_16	6027	2	0	100	100	10	NA	Voltage sense max value
27	VOLTAGE SENSE MAX VALUE PER	UINT_16	6029	2	30	100	100	1	NA	Voltage sense max value per
28	CURRENT SENSE MIN VALUE	UINT_16	6031	2	40	200	40	10	NA	Current sense min value
29	CURRENT SENSE MIN VALUE PER	UINT_16	6033	2	0	30	0	1	NA	Current sense min value per
30	CURRENT SENSE MAX VALUE	UINT_16	6035	2	40	200	200	10	NA	Current sense max value
31	CURRENT SENSE MAX VALUE PER	UINT_16	6037	2	30	100	100	1	NA	Current sense max value per
32	DELAY SENSING	UINT_16	6039	2	20	900	30	1	NA	Delay in sensing
34	FREQ DETECT VAL	UINT_16	6042	2	0	250	10	1	NA	FREQ_DETECT_VAL
35	STOP SIG FREQ VAL	UINT_16	6044	2	0	250	10	1	NA	STOP_SIG_FREQ_VAL
36	UV SIG VAL	UINT_16	6046	2	0	999	100	1	NA	UV_SIG_VAL
37	OL PER VAL	UINT_16	6048	2	0	250	100	1	NA	OL_PER_VAL
38	FREQ REF ONE	UINT_16	6050	2	0	400	10	1	NA	FREQ_REF_ONE
39	FREQ REF TWO	UINT_16	6052	2	0	400	20	1	NA	FREQ_REF_TWO
40	FREQ REF THREE	UINT_16	6054	2	0	400	50	1	NA	FREQ_REF_THREE
41	ACCELERATION RATE	UINT_16	6056	2	1	15	15	1	NA	ACCELERATION_RATE
42	DACCELERATION RATE	UINT_16	6058	2	1	15	15	1	NA	DACCELERATION_RATE
43	ACCELERATION1 RATE	UINT_16	6060	2	1	15	15	1	NA	ACCELERATION1_RATE
44	DACCELERATION1 RATE	UINT_16	6062	2	1	15	15	1	NA	DACCELERATION1_RATE
45	Grid_Factor	UINT_16	6064	2	60	120	85	100	NA	Grid_Factor

SHAKTI PUMPING LIFE

CHAPTER 8 : RECYCLE AND DISPOSAL

Electrical and electronic waste should not be thrown out in open or buried or fired. They must never be treated as residential waste. A drive which has reached end of its life or is not needed any more should be returned to the dealer or to the company. A user may also act as per the government norms prevailing in the area.

WARRANTY SERVICE

Shakti Pumps provides the warranty on this product as per Shakti Warranty Policy.

Warranty Conditions

If product gets fault and requires troubleshooting or for any kind of repair, kindly contact your dealer or company. To claim warranty kindly supply us the following:

1. Model and serial number of product.
2. Copy of invoice and warranty card.
3. Copy of installation report.
4. Message appearing on LCD display or any kind of information which could be helpful to resolve the fault.
5. Documents related to previous claims or exchanges. Upon receiving such information Shakti Pumps will decide about the repair/exchange.

A. Company may send person from its factory
B. Or from its service centre.
C. Or offer an equivalent exchange as per the model and age.

In case of exchange, the remaining portion of the original warranty period will be transferred to the exchanged drive and it is to be noted that customer will not get any new warranty card/certificate. All such exchanges and repair will be documented.

In case of exchange, Shakti Pumps will send the replacement unit as soon as possible and the defective unit should be sent back to the nearest service centre or to the dealer or to the company if possible in its original packing conditions. Service after warranty expiration will be as per Shakti Warranty policy.

Exclusion from warranty/liability

Kindly note the following conditions which cause exclusion from warranty/liability.

1. Customer has not sent warranty card to the dealer or to the company.
2. Customer has done any unauthorized modification or replacement or repair or maintenance.
3. Any attempt to change or erase model or serial number or seals of the product.
4. Failure to follow the safety instructions. (safety instructions are given in this manual)
5. Failure to properly store the drive. (Storage instructions are given in this manual)
6. Physical damage due to drop of equipment.
7. Failure to follow any kind of instructions given in this manual.
8. Improper use or misuse of the drive.
9. Insufficient ventilation of the drive.
10. Influence of foreign objects and force majeure (fire or lightning or severe weather or grid over voltage or natural calamities or animal attacks etc.)
11. The toggle switch is not covered under warranty.
12. This warranty excludes every condition whether statutory or otherwise, whatsoever not herein expressly set out.
13. For any further information please visit our website www.shaktipumps.com
14. Warranty will not be covered if input/output cable connects directly without lug.

SHAKTI PUMPING LIFE

WARRANTY CARD

Customer to fill following details

Name : .....
Address : .....
City/Village : .....
District : .....
State : .....
Country : .....
Pin Code : .....
Mobile no. : .....
Email id : .....

Information on Device:

Model no : .....
Serial no. : .....
Invoice no. : .....
Commissioning date : .....
Fault date and time : .....
Message related to fault on display : .....
Brief fault description and photo of display : .....
Sign : .....
Date : .....
Place : .....

Installer to fill following details

Modules Used : .....
Modules per string : .....
Number of strings : .....
Dealer license Number : .....
Company : .....
City/Village : .....
State : .....
Country : .....
Pin Code : .....
Mobile no. : .....
Email id : .....
Sign : : .....
Date : : .....
Place: : .....

INSTALLATION & OPERATING INSTRUCTIONS

BOOK-POST

Stamp

To,
SHAKTI PUMPS (INDIA) LIMITED
Plot No. 401, 402, & 413, Industrial Area, Sector - 3, Pithampur - 454774,
Dist. - Dhar, (M.P.) - INDIA, E-mail : info@shaktipumps.com
Visit us at : www.shaktipumps.com