SHAKTI®

PUMPING LIFE

SURFACE MOTORS

SMG/S4MG/E2MG (BLDC/PMSM)

PRODUCT INFORMATION & SERVICE MANUAL

SHAKTI

THE POWER OF INNOVATION, EFFICIENCY & TECHNOLOGY.

SHAKTI
PUMPING LIFE

CONTENTS PAGE NO.

INTERNATIONAL STANDARD FOR EFFICIENCY

The efficiency factors defines efficiency of motors when transforming electrical energy into mechanical energy.

The International Electrotechnical Commission (IEC), in order to harmonize the energy consumption regulations aimed to reduce the CO2 emissions and the impact of industrial operations on the environment, has established the standard IEC 60034-30:2014 which defines energy efficiency classes IE1, IE2, IE3, IE4, IE5 for low voltage three phase 50Hz and 60 Hz in power range 0.75 kW to 375 kW motors.

EFFICENCY CLASS	DESIGNATE
IE1	Standard Efficiency
IE2	High Efficiency
IE3	Premium Efficiency
IE4	Super Premium Efficiency
IE5	Ultra Premium Efficiency

These motors are also with compliance in efficiency standard indicated in IS 12615:2018/IEC - 60034.
We continuously improve product design according to the new standards IEC 60034-30 and IEC 60034-2-1.

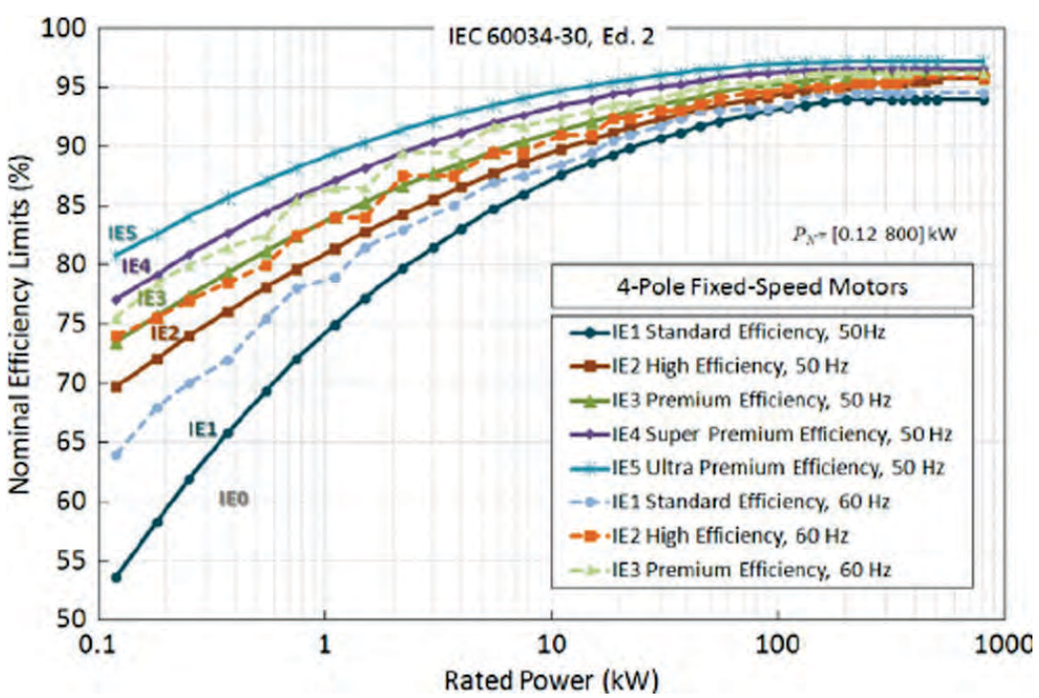

BENEFITS OF HIGH EFFICIENT MOTORS

- **Lower operating cost leads to short payback period due to higher efficiency.**
- **Motors have lower heat dissipation and temperature rise leads to increase life of motor.**
- **Higher thermal margins in design which reduces the cost.**
- **Reduction in CO2 emissions.**

STANDARD FOR MOTORS

All motors are designed as per the following Indian and International standards.

Indian Standards

IS : 325	Three phase Induction motors specifications
IS : 900	Code of practice for installation and maintenance of induction motors
IS : 1231	Dimension of foot mounted AC induction motors
IS : 2223	Dimension of flange mounted AC induction motors
IS : 2253	Designation for types of construction and mounting arrangements of rotating electrical machines
IS : 4029	Guide for testing three phase induction motors
IS : 4691	Degree of protection provided by enclosures rotating electrical machines
IS : 6362	Designation methods of cooling for rotating electrical machines
IS : 12065	Permissible limits of noise level for rotating electrical machines
IS : 12615	Energy efficient three phase squirrel cage induction motors

International Standards

IEC : 60034 - 1	Rating and performance
IEC : 60034 - 2 - 1	Methods for determining losses and efficiency
IEC: 60034 - 5	Classification of degree of protection
IEC : 60034 - 6	Methods of cooling
IEC : 60034 - 7	Symbol of construction and mounting arrangements
IEC : 60034 - 8	Terminal marking and direction of rotation
IEC : 60034 - 9	Noise limits
IEC : 60072 - 1	Designation and output of electrical machines
IEC : 60034 - 30 - 1	Efficiency classes of line operated AC motors
IEC : 60034 - 30 - 2	Efficiency classes of variable speed AC motors

KEY CHARACTERISTICS

APPLICATIONS

- Pumps
- Compressor
- Fans and Blowers
- Flour mill, Rolling mill, Mixers
- Machine Tools
- Textile & Plastic machineries
- Agriculture & Food processing
- Cranes , Hoist & Lifts
- Cooling tower

FEATURES AND BENEFITS

- Motors are fitted
  a) Dynamically balanced rotors.
  b) Double shielded antifriction bearings.
- Motor are protected against in-grace of moisture and dust particles with IP55 protection.
- Use of electric grade steel & copper leads to low operating cost.
- The cooling fins design are based on three dimensional heat transfer principle.
- Minimum friction losses.
- Low noise smooth running motor.
- Reliable operation.
- Easy maintenance.
- Low payback period.

TOLERANCES

Tolerance in performance of the motor is as per Indian & international standard.

For industrial motors according to IS 325/ IEC 60034-1, certain tolerances must be allowed on guaranteed values, taking into consideration the necessary tolerances for the manufacture of such motors and the materials used. The standard includes following remark:

Schedule of tolerance

1. Efficiency (η)	
· Motors up to and including 150 kW	-15 % of (1 - η)
· Motors above 150 kW	-10 % of (1 - η)
2. Total losses (applicable to motors with ratings >150 kW)	+10 % of the total losses
3. Power factor (cos φ)	- 1/6 of (1 - cos φ); min 0.02, max 0.07
4. Slip at full load and at working temperature	
· • For Motors having output < 1 kW	±30 % of the slip
· • For Motors having output ≥ 1 kW	±20 % of the slip
5. Locked rotor current (IST) with any specified starting apparatus	+ 20 % of the current
6. Locked rotor torque (TST)	- 15 % to + 25 % of the torque (+25 % may be exceeded by agreement
7. Pull out torque (TPO)	- 10 % of the torque except that after allowing for this tolerance the torque shall be not less than 1.6 or 1.5 times the rated torque
8. Moment of inertia	± 10 % of the value

Dimension Tolerances

1. Frame Size	
· • Frame Size H ≤ 250	0, - 0.5 mm
• Frame Size H ≥ 280	0, - 1mm
2. Diameter D of shaft extension	
· • 11 to 28 mm	j6
• 32 to 48 mm	k6
• 55mm and over	m6
3. Diameter N of flange spigot	
· • Up to F 500 B	j6
• above F 500 B	js6
4. Key width	h9

Dimension Tolerances

5. Width of drive shaft keyway (normal keying) P9

6. Key depth
   - Square section h9
   - Rectangular section h11

7. Eccentricity of shaft in flanged motors (standard class)

   - D ≤ 10 mm 0.030 mm
   - 10 mm < D ≤ 18 mm 0.035 mm
   - 18 mm < D ≤ 30 mm 0.040 mm
   - 30 mm < D ≤ 50 mm 0.050 mm
   - 50 mm < D ≤ 80 mm 0.060 mm
   - 80 mm < D ≤ 120 mm 0.070 mm

8. Concentricity of spigot diameter and perpendicularity of mating surface of flange to shaft (standard class) Flange

   - F65 to F 115 0.080 mm
   - F130 to F 265 0.100 mm
   - F300 to F 50 0.125 mm
   - F600 to F740 0.160 mm
   - F940 to F1080 0.200 mm

SMG MOTOR SPECIFICATION

- Motor Type:- AC Three phase induction Motor
- Enclosure:- TEFC (Totally enclosed fan cooled)
- Frame:- 71 to 180
- Mounting:- Foot cum flange B35 & Face V1/V18 & Foot Mounted B3
- Rated Power:- 2 POLE -0.37 kW to 22.0 kW
  4 POLE -0.37 kW to 18.5 kW
- Voltage:- 220-415 50Hz/ 220-460 60Hz
- Rated Speed:- 3000 / 3600 /1500 /1800
- Ambient Temperature:- -20 °C to +60 °C
- Altitude:- Should be below than 1000 meters above sea level
- Relative humidity:- upto 100%
- Connection:- 50 Hz, 380-415 V star/delta & 220-240 delta
  60 Hz, 380-460 V star/delta & 220-240 delta
  STAR (0.5 – 5.0 hp)/DELTA (7.5-25.0 hp)
- Direction of Rotation:- Anticlockwise or Clockwise as seen from the driver end side
- Duty / Rating:- S1
- Insulation Class:- Class 'H'
- Degree of Protection:- IP55
- Cooling Method:- IC411 /Shaft mounted fan
- Efficiency Class:- IE3 (0.37 – 7.5) kW
  IE4 (11.0 - 22.0) kW

ELECTRICAL PERFORMANCE TABLE

ELECTRICAL DATA SMG 2 -POLE 50Hz (230 V SINGLE PHASE)

S. NO.	Material Code	Rated Output	Frame Size	Full Load SPEED	Full Load Current	Nominal Efficiency At % LOAD			Power Factor At % LOAD			Locked Torque in Terms of Full Load Torque
		kW		[min^{-1}]	A	50%	75%	100%	50%	75%	100%	Percent
1	9000011335	0.37	SMG-71	2846	3.4	37	53	59	0.78	0.78	0.79	150.0
2	9000010446	0.55	SMG-71	2792	3.6	54	63	69	0.90	0.9	0.97	150.0
3	9000010447	0.75	SMG-80	2839	4.7	60	68	72	0.94	0.95	0.96	150.0
4	9000011371	1.1	SMG-80	2740	7.4	57	67	69	0.90	0.90	0.93	150.0
5	9000011054	1.5	SMG-90S	2885	9.4	62	70	75	0.73	0.87	0.94	200.0
6	9000011373	2.2	SMG-90L	2899	13.3	62	70	75	0.87	0.90	0.97	200.0

ELECTRICAL DATA SMG 2-POLE 60Hz (230 V SINGLE PHASE)

S. NO.	Material Code	Rated Output	Frame Size	Full Load SPEED	Full Load Current	Nominal Efficiency At % LOAD			Power Factor At % LOAD			Locked Torque in Terms of Full Load Torque
		kW		[min^{-1}]	A	50%	75%	100%	50%	75%	100%	Percent
1	9000019413	0.37	SMG-71	3448	2.7	41	55	67	0.97	0.98	0.98	150.0
2	9000019413	0.55	SMG-71	3384	3.4	55	67	71	0.98	0.98	0.98	150.0
3	9000019414	0.75	SMG-80	3460	4.7	60	67	75	0.87	0.89	0.97	150.0
4	9000019415	1.1	SMG-80	3345	7.0	67	75	76	0.89	0.97	0.93	150.0
5	9000019416	1.5	SMG-90S	3499	10.1	60	69	74	0.88	0.88	0.88	200.0
6	9000017961	2.2	SMG-90L	3492	13.6	87	67	73	0.82	0.91	0.96	200.0

ELECTRICAL PERFORMANCE TABLE

ELECTRICAL DATA SMG 2-POLE 50Hz (380/415 V THREE PHASE)

S.NO.	Material Code	Rated Output	Frame Size	Full Load SPEED	Full Load Current	Nominal Efficiency At 96 LOAD			Power Factor At 96 LOAD			Locked Torque in Terms of Full Load Torque
		kW		[min-']	A	50%	75%	100%	50%	75%	100%	Percent
1	9000011336	0.37	SMG-71	2862	1.1	73	75	76	0.52	0.56	0.61	170
2	9000011332	0.55	SMG-71	2738	1.5	75	75	75	0.53	0.57	0.69	170
3	9000011333	0.75	SMG-80	2808	1.8	81	81	81	0.65	0.78	0.80	170
4	9000011372	1.1	SMG-80	2800	2.5	81	81	82	0.58	0.73	0.74	170
5	9000011334	1.5	SMG-905	2915	3.6	74	77	81	0.58	0.68	0.71	170
6	9000011374	2.2	SMG-90L	2915	4.5	83	84	86	0.65	0.78	0.81	170
7	9000014131	3.0	SMG-100	2905	5.7	85	86	87	0.72	0.86	0.87	160
8	9000014130	3.7	SMG-100	2941	7.6	85	86	87	0.69	0.85	0.86	160
9	9000018910	5.5	SMG-132	2938	10.8	86	87	88	0.65	0.79	0.80	160
10	9000014288	7.5	SMG-132	2931	14.7	88	88	89	0.66	0.80	0.80	160
11	9000014567	11.0	SMG-160	2953	19.9	90	92	93	0.72	0.82	0.83	160
12	9000014873	15.0	SMG-160	2968	27	91	92	93	0.73	0.83	0.84	160
13	9000013772	18.5	SMG-160	2946	32.3	91	92	93	0.74	0.86	0.86	160
14	9000025643	22.0	SMG-180M	2950	37.8	91	92	92	0.75	0.88	0.89	160
15	9000030282	30.0	SMG- 200 L	2965	48.4	91	92	93.3	0.81	0.90	0.94	160

ELECTRICAL DATA SMG 2-POLE 60Hz (460 V THREE PHASE)

S.NO.	Material Code	Rated OUTPUT	Frame Size	Full Load SPEED	Full Load Current	Nominal Efficiency At 96 LOAD			Power Factor At 96 LOAD			Locked Torque in Terms of Full Load Torque
		kW		[min-']	A	50%	75%	100%	50%	75%	100%	Percent
1	9000011336	0.37	SMG-71	3432	0.9	74	78	78	0.49	0.55	0.63	170
2	9000011332	0.55	SMG-71	3345	1.2	78	78	79	0.62	0.73	0.73	170
3	9000011333	0.75	SMG-80	3445	1.6	81	82	83	0.61	0.73	0.73	170
4	9000011372	1.1	SMG-80	3385	2.2	83	83	83	0.63	0.75	0.76	170
5	9000011334	1.5	SMG-90S	3526	3.1	74	82	83	0.73	0.73	0.73	170
6	9000011374	2.2	SMG-90L	3420	3.9	82	83	85	0.73	0.73	0.84	170
7	9000014131	3.0	SMG-100	3532	5.2	78	81	83	0.72	0.85	0.86	160
8	9000014130	3.7	SMG-100	3528	6.3	82	84	86	0.72	0.85	0.86	160
9	9000018910	5.5	SMG-132	3551	9.5	84	88	89	0.82	0.82	0.82	160
10	9000014288	7.5	SMG-132	3542	13.1	83	86	87	0.82	0.83	0.83	160
11	9000014567	11.0	SMG-160	3526	16.9	84	87	89	0.93	0.93	0.93	160
12	9000014873	15.0	SMG-160	3560	25	87	88	91	0.88	0.88	0.88	160
13	9000013772	18.5	SMG-160	3540	30.7	84	86	90	0.84	0.84	0.84	160
14	9000025643	22.0	SMG-180M	3544	36	87	87	92	0.83	0.83	0.83	160
15	9000030282	30.0	SMG- 200 L	3563	47	90	91	92	0.77	0.81	0.88	160

ELECTRICAL PERFORMANCE TABLE

ELECTRICAL DATA SMG 4-POLE 50Hz (380/415 V THREE PHASE)

S. NO.	Material Code	Rated Output	Frame Size	Full Load SPEED	Full Load Current	Nominal Efficiency At % LOAD			Power Factor At % LOAD			Locked Torque in Terms of Full Load Torque
		kW		[min^{-1}]	A	50%	75%	100%	50%	75%	100%	Percent
1	9000025327	0.37	SMG-71	1419	1.0	60	69	70	0.45	0.59	0.68	170.0
2	9000025328	0.55	SMG-71	1465	1.2	76	76	78	0.36	0.50	0.62	170.0
3	9000025329	0.75	SMG-80	1422	1.7	76	78	80	0.50	0.62	0.75	170.0
4	9000025330	1.1	SMG-80	1462	2.4	79	84	85	0.47	0.64	0.72	170.0
5	9000025331	1.5	SMG-90S	1448	3.0	81	83	85	0.59	0.74	0.80	170.0
6	9000025332	2.2	SMG-90L	1452	4.7	78	81	82	0.58	0.70	0.78	170.0
7	9000025333	3.0	SMG-100	1473	6.3	82	86	87	0.67	0.67	0.77	160.0
8	9000025334	3.7	SMG-100	1467	7.3	86	87	88	0.67	0.77	0.81	160.0
9	9000025335	5.5	SMG-132	1453	11.0	86	87	88	0.63	0.76	0.80	160.0
10	9000026843	7.5	SMG-132	1453	14.2	88	89	90	0.66	0.74	0.82	160.0

BEARING DETAILS

SMG MOTOR -2 POLE

FRAME SIZE	FLANGE MOUNTED (SNB PUMP)		FOOT MOUNTED MOTOR (SNK PUMP)		FOOT MOUNTED MOTOR NON STD.(SCM,SH		FACE MOUNTED (SRN PUMP)	
	DE	NDE	DE	NDE	DE	NDE	DE	NDE
71	-	-	-	-	6203 ZZ C3	6201 ZZ C3	6204 ZZ C3	6201 ZZ C3
80	-	-	-	-	6203 ZZ C3	6201 ZZ C3	6204 ZZ C3	6201 ZZ C3
90S/L	6305 ZZ C3	6205 ZZ C3	6305 ZZ C3	6205 ZZ C3	6205 ZZ C3	6205 ZZ C3	6305 ZZ C3	6205 ZZ C3
100	6306 ZZ C3	6306 ZZ C3	6306 ZZ C3	6306 ZZ C3	6306 ZZ C3	6206 ZZ C3	7306 ZZ C4	6306 ZZ C3
132	6308 ZZ C3	6308 ZZ C3	6208 ZZ C3	6208 ZZ C3	-	-	7308 ZZ C3	6308 ZZ C3
160	6309 ZZ C3	6209 ZZ C3	6309 ZZ C3	6209 ZZ C3	-	-	7309	6209 ZZ C3
180M/L	6310 ZZ	6210 ZZ	6210 ZZ	6210 ZZ	-	-	7310	6210 ZZ

SMG MOTOR -4 POLE

FRAME SIZE	FLANGE MOUNTED (SNB PUMP)		FOOT MOUNTED (SNK PUMP)		FACE MOUNTED (SRN PUMP)	
	DE	NDE	DE	NDE	DE	NDE
71	6204 ZZ C3	6202 ZZ C3	6204 ZZ C3	6202 ZZ C3	6204 ZZ C3	6202 ZZ C3
80	6204 ZZ C3	6204 ZZ C3	6204 ZZ C3	6204 ZZ C3	6204 ZZ C3	6204 ZZ C3
90S/L	6305 ZZ C3	6205 ZZ C3	6305 ZZ C3	6205 ZZ C3	6305 ZZ C3	6205 ZZ C3
100L	6306 ZZ C3	6206 ZZ C3	6306 ZZ C3	6206 ZZ C3	7306 ZZ C4	6206 ZZ C3
112M	6306 ZZ C3	6206 ZZ C3	6306 ZZ C3	6206 ZZ C3	7306 ZZ C4	6206 ZZ C3
132 S/M	6308 ZZ C3	6308 ZZ C3	6308 ZZ C3	6308 ZZ C3	7308 ZZ C3	6306 ZZ C3
160	6309 ZZ C3	6209 ZZ C3	6309 ZZ C3	6209 ZZ C3	7309	6209 ZZ C3
180M/L	6310 ZZ	6210 ZZ	6210 ZZ	6210 ZZ	7310	6210 ZZ

S4MG MOTOR SPECIFICATION

- Motor Type:- Line Start Permanent magnet Synchronous Motor
- Enclosure:- TEFC (Totally enclosed fan cooled)
- Frame:- 80 to 132
- Mounting:- Foot cum flange B35 & Face V1/V18 & Foot Mounted B3
- Rated Power:- 0.37 kW to 7.5 kW
- Voltage:- 380-415 50Hz/ 380-460 60Hz
- Rated Speed:- 3000 / 3600 RPM
- Ambient Temprature:- -20 °C to +60 °C
- Altitude:- Should be below than 1000 meters above sea level
- Relative humidity:- upto 100%
- Connection:- 50 Hz, 380-415 V star/delta
  STAR (0.5 – 5.0 hp)/DELTA (7.5 - 10.0 hp)
- Direction of Rotation:- Anticlockwise or Clockwise as seen from the driver end side
- Duty / Rating:- S1
- Insulation Class:- Class 'H'
- Degree of Protection:- IP55
- Cooling Method:- IC411 /Shaft mounted fan
- Efficiency Class:- IE4

ELECTRICAL PERFORMANCE TABLE

ELECTRICAL DATA S4MG

Material Code		Rated Output	Frame Size	Voltage	Full Load Speed	Full Load Current	Efficiency [%]	Power Factor [%]
Flange	Face	kW	mm	(V)	[min^{-1}]	(A)	100	100
NA	9000024638	0.37	80	415	3000	0.8	85.0	0.72
NA	9000024639	0.55	80	415	3000	1.1	86.7	0.81
NA	9000024640	0.75	80	415	3000	1.4	86.5	0.84
NA	9000024835	1.1	90	415	3000	1.8	87.2	0.94
NA	9000024834	1.5	90	415	3000	3.1	88.3	0.77
9000027642	9000024833	2.2	90	415	3000	3.9	90.5	0.88
9000024689	9000024688	3	100	415	3000	5.2	88.9	0.91
9000024455	9000024494	3.7	100	415	3000	6.3	89.5	0.91
9000024644	9000024456	5.5	132	415	3000	11.5	90.8	0.74
9000024645	9000024457	7.5	132	415	3000	13.9	91.7	0.81

BEARING DETAILS

S4MG MOTOR

FRAME SIZE	FLANGE MOUNTED (SNB PUMP)		FOOT MOUNTED MOTOR (SNK PUMP)		FOOT MOUNTED MOTOR NON STD.(SCM,SH		FACE MOUNTED (SRN PUMP)	
	DE	NDE	DE	NDE	DE	NDE	DE	NDE
71	-	-	-	-	6203 ZZ C3	6201 ZZ C3	6204 ZZ C3	6201 ZZ C3
80	-	-	-	-	6203 ZZ C3	6201 ZZ C3	6204 ZZ C3	6201 ZZ C3
90S/L	6305 ZZ C3	6205 ZZ C3	6305 ZZ C3	6205 ZZ C3	6205 ZZ C3	6205 ZZ C3	6305 ZZ C3	6205 ZZ C3
100	6306 ZZ C3	6306 ZZ C3	6306 ZZ C3	6306 ZZ C3	6306 ZZ C3	6206 ZZ C3	7306 ZZ C4	6306 ZZ C3
132	6308 ZZ C3	6308 ZZ C3	6208 ZZ C3	6208 ZZ C3	-	-	7308 ZZ C3	6308 ZZ C3

E2MG MOTOR SPECIFICATION

- Motor Type:- Synchronous motor
- Enclosure:- TEFC (Totally enclosed fan cooled)
- Frame:- 71 to 180
- Mounting:- Foot cum flange B35 & Face V1/V18 & Foot Mounted B3
- Rated Power:- 0.37 kW to 18.5 kW
- Rated Speed:- 3000 / 3600 RPM
- Ambient Temperature:- -20 °C to +60 °C
- Altitude:- Should be below than 1000 meter above sea level
- Relative humidity:- upto 100%
- Connection:- (0.5-25.0 hp) STAR
- Direction of Rotation:- Anticlockwise or Clockwise as seen from the driver end side
- Duty / Rating:- S1
- Insulation Class:- Class 'H'
- Degree of Protection:- IP55
- Cooling Method:- IC411 / Shaft mounted fan
- Efficiency Class:- IE5

ELECTRICAL PERFORMANCE TABLE

E2MG MOTOR

Material Code		Rated Output	Frame Size	Voltage	Full Load Speed	Full Load Current	Efficiency [%]	Power Factor [%]
Flange	Face	kW	mm	(V)	[min^{-1}]	(A)	100	100
NA	NA	0.37	71	48	3000	6.8	84.4	0.92
NA	9000025025	0.75	80	58	3000	9.6	88.2	0.99
9000022889	9000025026	1.5	90	145	3000	7.4	87.7	0.97
NA	9000025027	2.2	112	180	3000	8.3	90.6	0.96
9000027644	9000024498	3.7	112	300	3000	8.9	93.2	0.95
NA	9000025029	5.5	112	220	3000	17	94.9	0.97
NA	9000025030	7.5	112	280	3000	16.8	94.7	0.98
NA	9000025031	11	132	300	3000	25	92.8	0.96
9000025042	9000025032	15	160	280	3000	35.4	94	0.97
9000025043	9000025033	18.5	160	415	3000	29.2	95.5	0.94

BEARING DETAILS

E2MG MOTOR

FRAME SIZE	FLANGE MOUNTED (SNB PUMP)		FOOT MOUNTED NON STD. (SMB		FACE MOUNTED (SRN PUMP)	
	DE	NDE	DE	NDE	DE	NDE
71	-	-	-	-	6204 ZZ C3	6201 ZZ C3
80	-	-	-	-	6204 ZZ C3	6201 ZZ C3
90S/L	6206 ZZ C3	6206 ZZ C3	6206 ZZ C3	6206 ZZ C3	6206 ZZ C3	6206 ZZ C3
112	6206 ZZ C3	6206 ZZ C3	6206 ZZ C3	6206 ZZ C3	7206 ZZ C4	6206 ZZ C3
132 S/M	6308 ZZ C3	6308 ZZ C3	6308 ZZ C3	6308 ZZ C3	7308 ZZ C3	6306 ZZ C3
160	6309 ZZ C3	6209 ZZ C3	6309 ZZ C3	6209 ZZ C3	7309	6209 ZZ C3
180M/L	6310 ZZ	6210 ZZ	6210 ZZ	6210 ZZ	7310	6210 ZZ

MOUNTING DIMENSIONS - B3

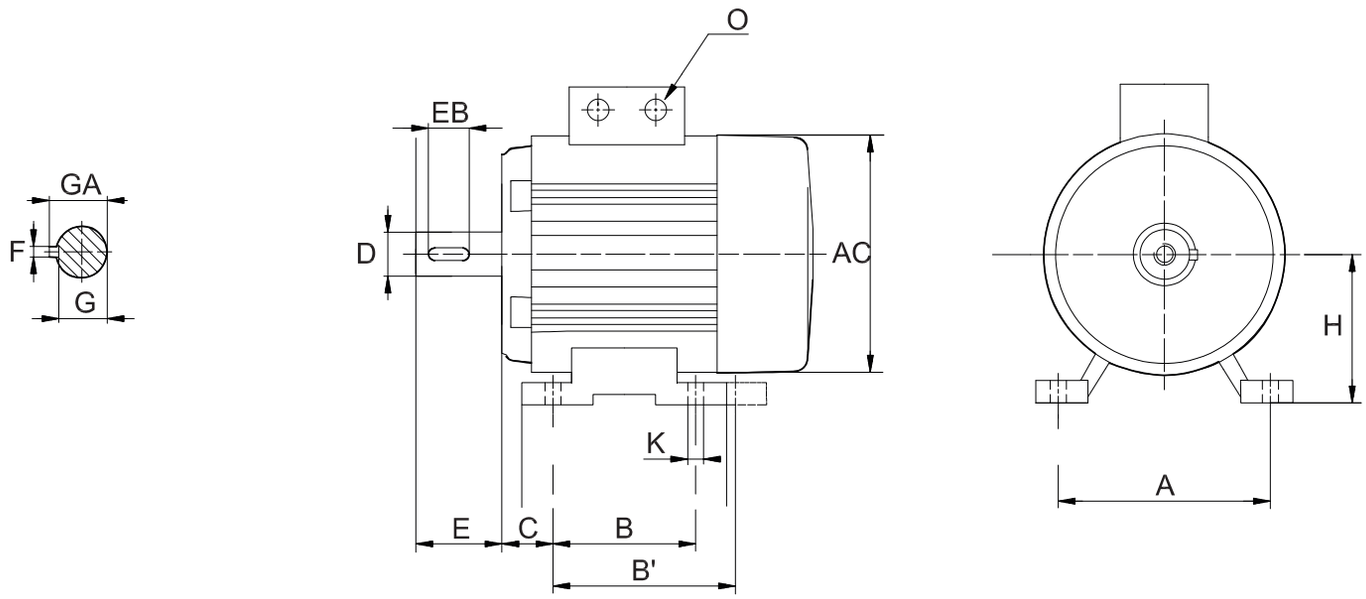

FRAME SIZE	STATOR HOUSING		SHAFT END						FOOT IM B3						CABLE ENTRY
	AC	H	D	E	EB	F	G	GA	A	B	B'	C	H	K	O
71	141	71	14	30	22	5	11	16	112	90	-	45	71	7	1XM20
80	141	80	19	40	32	6	15.5	21.5	125	100	-	50	80	10	1XM20
90S	178	90	24	50	40	8	20	27	140	100	125	56	90	10	4XM20
90 L	178	90	24	50	40	8	20	27	140	100	125	56	90	10	2XM20
100 L	198	100	28	60	50	8	24	31	160	140	-	63	100	12	1XM20
132S/M	220	132	38	80	70	10	33	41	216	140	-	89	132	12	4XM20
160M/L	314	160	42	110	82	12	37	45	254	210	-	108	160	15	2XM20
180 M	354	180	48	110	100	14	42.5	51.5	279	241	279	121	180	15	2XM20

MOUNTING DIMENSIONS - IM B34, IM B14/V18

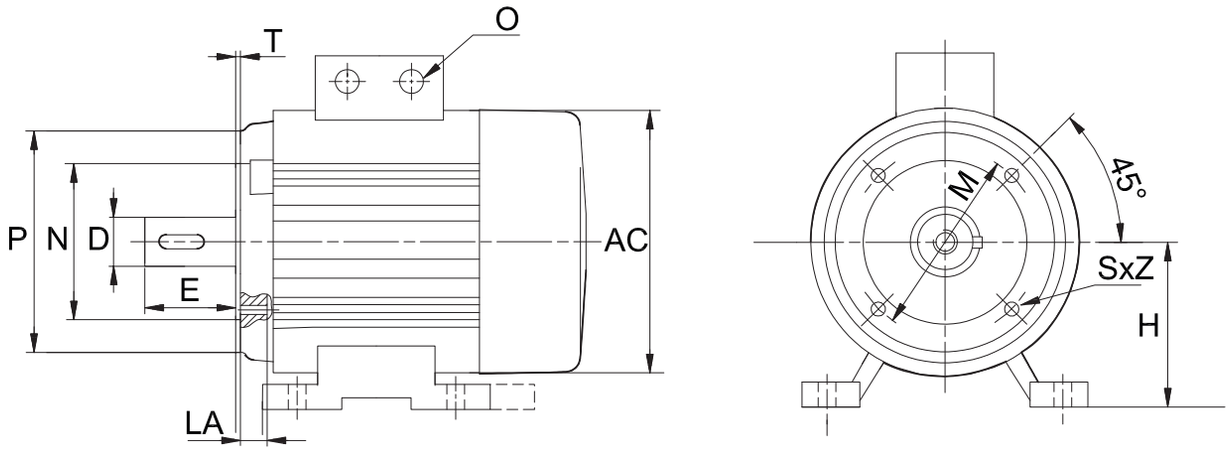

FRAME SIZE	STATOR HOUSING		SHAFT END		FLANGE IM B34, IM B14/V18						CABLE ENTRY
	AC	H	D	E	LA	M	N	P	S	T	O
71	141	71	14	30	12	85	70	105	M6X4	2.5	1XM20
80	141	80	19	40	12	100	80	120	M6X4	3	1XM20
90S	178	90	24	50	13	115	95	135	M8X4	3	4XM20
90 L	178	90	24	50	13	115	95	135	M8X4	3	2XM20
100 L	198	100	28	60	14	130	110	160	M8X4	3.5	1XM20
132S/M	220	132	38	80	-	265	230	300	Ø15X4	4	4XM20
160M/L	314	160	42	110	-	300	250	350	Ø19X4	5	2XM20
180 M	354	160	48	110	-	300	250	350	Ø19X4	5	2XM20

OUTLINE DIAGRAM

MOUNTING DIMENSIONS - IM B35, IM B5/V1

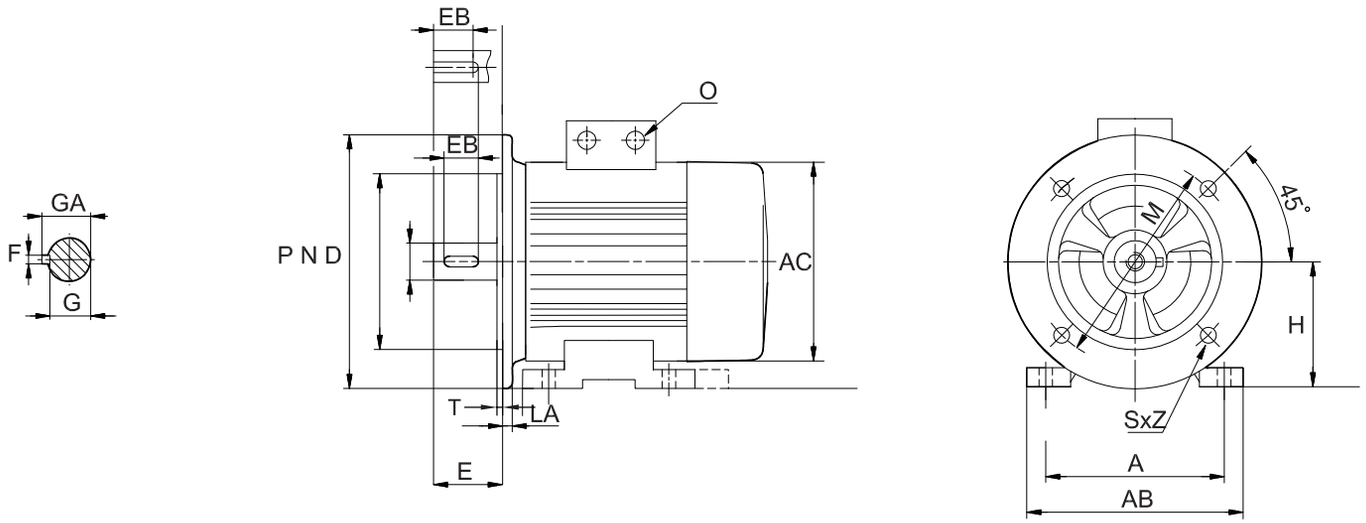

FRAME SIZE	STATOR HOUSING		SHAFT END						FLANGE IM B35, IM B5/V1						CABLE ENTRY
	AC	H	D	E	EB	F	G	GA	LA	M	N	P	S	T	O
71	141	71	14	30	22	5	11	16	10	130	110	160	Ø10X4	3.5	1XM20
80	141	80	19	40	35	6	15.5	21.5	10	165	130	200	Ø12X4	3.5	1XM20
90S	178	90	24	50	40	8	20	27	18	165	130	200	Ø12X4	3.5	4XM20
90 L	178	90	24	50	40	8	20	27	18	165	130	200	Ø12X4	3.5	2XM20
100/112	198	100	28	60	50	8	24	31	10	215	180	250	Ø15X4	4	1XM20
132S/M	220	132	38	80	70	10	33	41	12	265	230	300	Ø15X4	4	4XM20
160M/L	314	160	42	110	82	12	37	45	12	300	250	350	Ø19X4	5	2XM20
180 M	354	180	48	110	100	14	42.5	51.5	12	300	250	350	Ø19X4	5	2XM20

CABLE ENTRY SIZE

FRAME	CABLE ENTRY
71-100	1XM20
80	1XM20
90	4XM20
90L	2XM20
100/112	1XM20
132	4XM20
160	2XM20
180	2XM25

SOUND LEVEL

As per IS 12065 / IEC 60034-9 standard the permitted noise level of electrical machines are mentioned as per below table

FRAME	POWER		SOUND LEVEL (db) (A)	
	kW	HP	50 Hz	60 Hz
SMG 71	0.37 -0.55	0.5 - 0.75	55	60
SMG 80	0.75 - 1.1	1.0 - 1.5	55	60
SMG 90/90L	1.5 - 2.2	2.0 - 3.0	60	65
SMG 100/112	3.0 - 3.7	4.0 - 5.5	60	70
SMG 132	5.5 - 7.5	7.5 - 10.0	70	75
SMG 160	11.0 - 18.5	15.0 - 25.0	70	80
SMG 180	22	30	70	80

Dec./2022-23/L3/000 VC - 000000 | Dec. 2022/R1 | SAP No. 2900000537

India : Toll Free No. 1800 103 5555 Other Countries : +91-7292 410500

SHAKTI PUMPS (INDIA) LIMITED

Plot No. 401, 402, & 413, Industrial Area, Sector - 3, Pithampur, Dist. Dhar - 454774 (M.P.) India
Fax: +91-7292 410645, E-mail: info@shaktipumps.com, sales@shaktipumps.com,
Visit us at : www.shaktipumps.com